REV	DESCRIPTION	DRAWN	DATE
		APPROVED	DATE

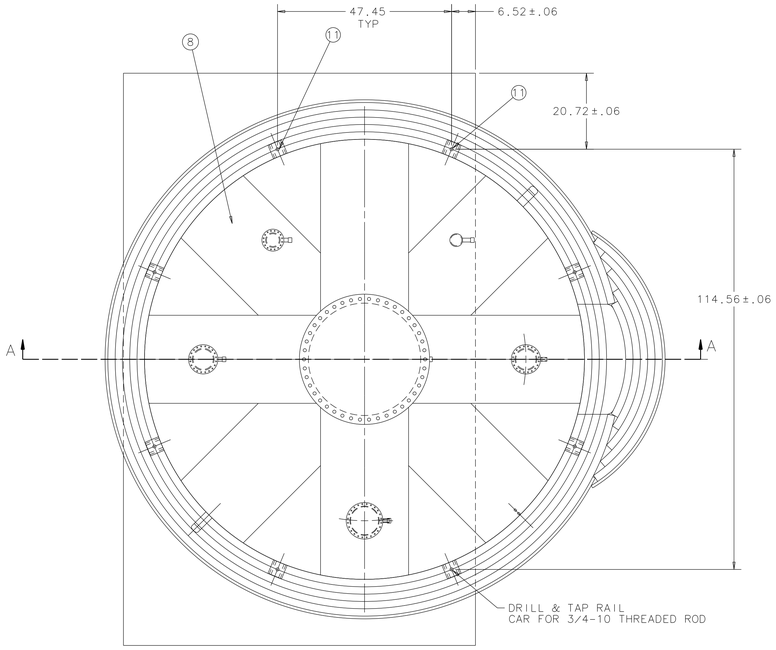

DETAIL B
SCALE: 4:1

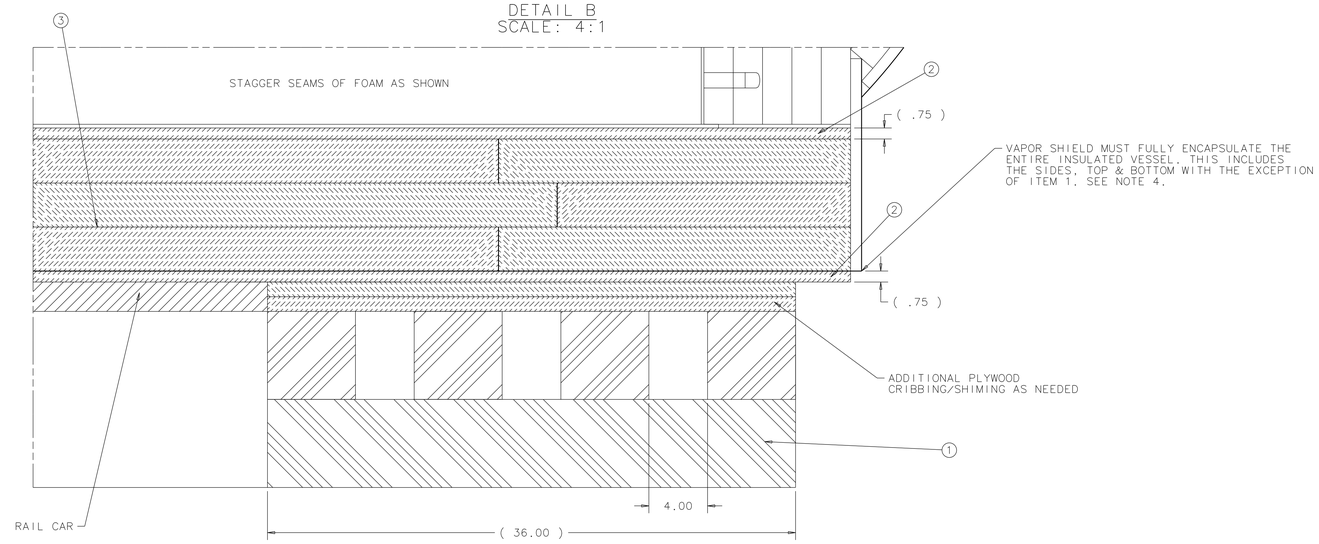

SECTION C
HORIZONTAL LUMBER SHOWN
HATCHED FOR CLAIRITY

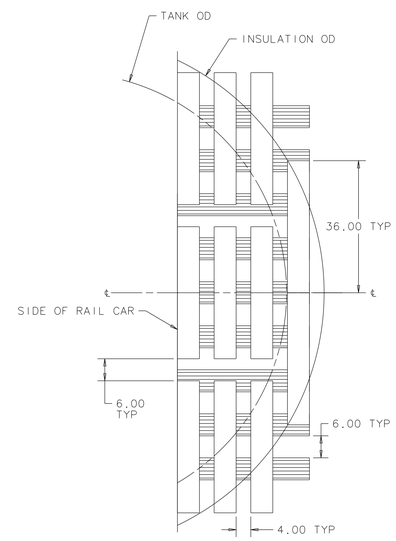

INSULATION NOTES:

1. FLOOR:
 1.1. INSTALL 4 THREADED RODS (ITEM 11) IN RAIL CARS.
 1.2. LAYOUT LOWER PLYWOOD ON CARS AS SHOWN.
  1.2.1. SHIM AS NECESSARY SO PLYWOOD IS LEVEL ± 0.125
 1.3. COVER PLYWOOD WITH 2 COATS OF MASTIC (ITEM 10). SEAL HOLES WHERE THREADED RODS PROTRUDE.
 1.4. LAYOUT FOAM BOARDS AS SHOWN
  1.4.1. STAGGER ALL SEAMS.
  1.4.2. ALTERNATE DIRECTION WITH EACH LAYER.
  1.4.3. SEAM SEAMS WITH MASTIC
  1.4.4. FILL GAPS WITH "GREAT STUFF" EXPANDING FOAM
 1.5. LAYOUT TOP PLYWOOD.
 1.6. LOWER TANK ON TO RAIL CARS
 1.7. ANCHOR TO RAIL CARS WITH THREADED ROD.
 1.8. ROLL VESSEL INTO HALL
 1.9. PLACE CRIBBING AROUND TANK BOTTOM TO FULL INSULATION DIAMETER.
 1.10. INSTALL REMAINING ANCHOR BOLTS
2. VESSEL SIDES:
 2.1. COVER SIDES WITH 5 LAYERS OF ITEM 4. STAGGER ALL VERTICAL SEAMS.
  2.1.1. FIT INSULATION SNUGLY OVER & AROUND ALL FEATURES & PROTRUSIONS OF VESSEL. ALL SURFACES OF VESSEL MUST BE INSULATED TO A DEPTH OF 10".
  2.1.2. FILL VOIDS IN ITEM 4 WITH ITEM 8
 2.2. APPLY 1 COMPLETE LAYER OF ITEM 5 TO THE INSULATED VERTICAL WALLS.
 2.3. SECURE INSULATION TO VESSEL USING AT LEAST 3 COMPLETE WRAPS OF ITEM 6. ENSURE THAT ROPE IS LEVEL & TIGHT.
  2.3.1. SECURE EACH ROPE WITH 1) ITEM 7. USE CRIMP TOOL (ITEM 13) TO CRIMP.
  2.3.2. FILL VOIDS IN ITEM 5 WITH "GREAT STUFF" EXPANDING FOAM
 2.4. SEAL SEAMS BETWEEN BOARDS WITH MASTIC
 2.5. FILL VOIDS & CRACKS IN ITEM 5 WITH "GREAT STUFF" EXPANDING FOAM
3. VESSEL ROOF:
 3.1. COVER ROOF WITH 5 LAYERS OF ITEM 8
  3.1.1. FIT INSULATION SNUGLY OVER & AROUND ALL FEATURES & PROTRUSIONS OF VESSEL. ALL SURFACES OF VESSEL MUST INSULATED TO A DEPTH OF 10".
  3.1.2. FILL ALL VOIDS, GAPS & AIR POCKETS IN INSULATION WITH ITEM 8
 3.2. APPLY 1 LAYER OF ITEM 5 TO THE INSULATED ROOF.
  3.2.1. FILL VOIDS & GAPS IN ITEM 5 WITH "GREAT STUFF" EXPANDING FOAM
4. VAPOR SHIELD:
 VAPOR SHIELD MUST FULLY ENCAPSULATE THE ENTIRE INSULATED VESSEL. THIS INCLUDES THE SIDES, TOP & BOTTOM.
 4.1. ENCAPSULATE THE ENTIRE INSULATED VESSEL WITH MASTIC & REINFORCING MESH
  4.1.1. APPLY 2 COATS PER MANUFACTURES RECOMMENDED PROCEDURES.

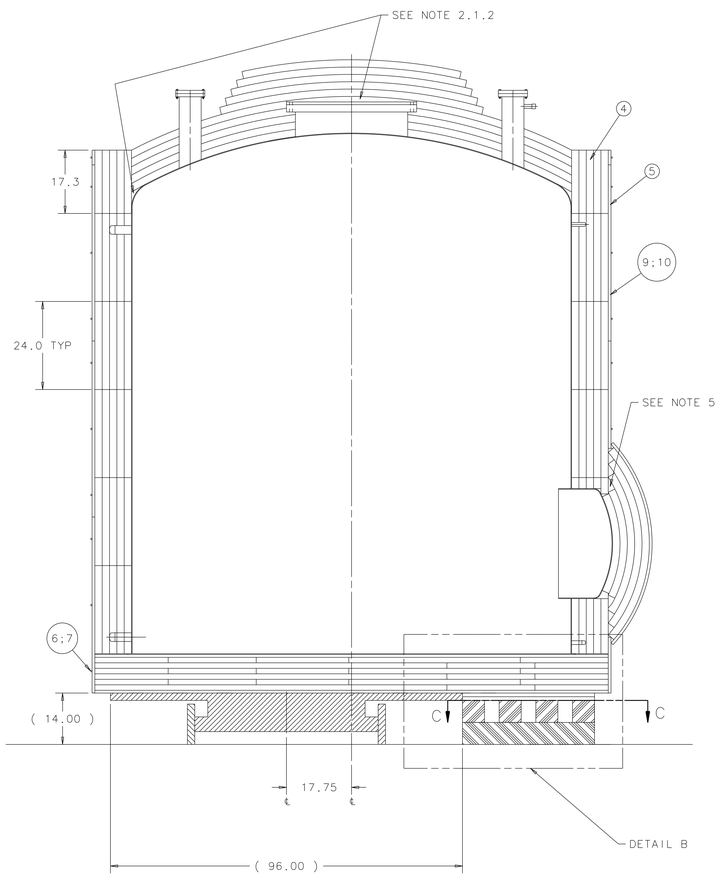

SECTION A-A

LAY OUT PLYWOOD(ITEM 2) AS SHOWN.
TRIM EXCESS AWAY.
SCALE: 1:32

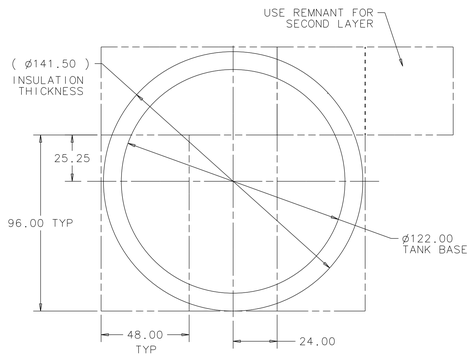

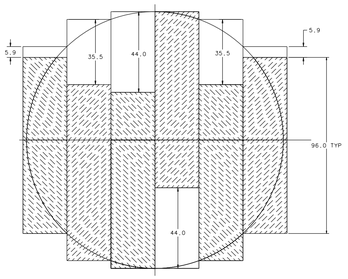

LAY OUT BASE INSULATION (ITEM 3)
AS SHOWN SO NO SEAMS LINE UP.
LAY ADDITIONAL LAYERS PERPENDICULAR.
TRIM EXCESS AWAY.
SCALE: 1:32

ITEM	PART NO.	DESCRIPTION OR SIZE	QTY.
14	ON HAND	GREAT STUFF EXPANDING FOAM INSULATION	
13	COML	ROPE SLEEVE COMP. TOOL MCMASTER CARR: 3633T15	1
12	1210-080000	3/4-10 SS HEX NUT	8
11	COML	3/4-10 X 24" SS THREADED ROD MCMASTER CARR: 98804A036	4
10	COML	FOSTER 30-90 VAPOR SAFE MASTIC 5 GAL CONTAINER	8
9	COML	42-24 MAST-A-FAB WHITE REINFORCING MEMBRANE	600 SQ FT
8	COML	2 X 24 X 48 FIBERGLASS INS OWENS CORNING: 711	200
7	COML	3/16 DIA ROPE COMP. SLEEV MCMASTER CARR: 3633T5	1 PK
6	COML	3/16 DIA NYLON ROPE MCMASTER CARR: 3838T531	500'
5	COML	0.75 X 48 X 96 TRYMER 2000 XP ITW INSULATION	14
4	COML	2 X 24 X 48 FIBERGLASS INS OWENS CORNING: 703	275
3	COML	3 X 24 X 96 TRYMER 6000 XP ITW INSULATION	24
2	1850-260000	3/4" X 48" X 96" PLYWOOD SHEET	9
1	1850-160000	PLASTIC LUMBER, 6 X 6 X 36 LG	20

PARTS LIST

UNLESS OTHERWISE SPECIFIED			ORIGINATOR	R.SCHMITT	22-FEB-2009
FRACTIONS	DECIMAL	ANGLES	DRAWN	J.TILLMAN	01-APR-2009
± 1/4	± - -	± - -	CHECKED	J.RAUCH	10-JUN-2009
			APPROVED	R.SCHMITT	10-JUN-2009

1. BREAK ALL SHARP EDGES - - MAX.
2. DO NOT SCALE DRAWING.
3. DIMENSIONS BASED UPON ASME Y14.5M-1994
4. MAX. ALL MACH. SURFACES
5. DRAWING UNITS: U.S. INCH

USED ON

MATERIAL
SEE PARTS LIST ABOVE

FERMI NATIONAL ACCELERATOR LABORATORY
UNITED STATES DEPARTMENT OF ENERGY

FLARE - GENERAL
PRELIMINARY DESIGN
LAR TANK INSULATION

SCALE	DRAWING NUMBER	SHEET	REV
1:16 & NOTED	3942.000-ME-466366	1 OF 1	

CREATED WITH : Ideas12NXSeries | GROUP: PPD/MECHANICAL DEPARTMENT

NOTICE: IMAGE OBTAINED FROM FERMILAB WEB SITE

This information is provided for REFERENCE use only.
Not for MANUFACTURE, or DESIGN INFORMATION.
All information contained in this document represents work sponsored by an agency of the U.S. Government.
Neither the U.S. Government nor any agency thereof, nor Universities Research Association, Inc., nor any of their employees or officers, makes any warranty, express or implied, or assumes any legal liability or responsibility for the accuracy, completeness, or usefulness of any information, apparatus, product or process disclosed, or represents that its use would not infringe privately owned rights.