Department of Energy
Fermi Site Office
Post Office Box 2000
Batavia, Illinois 60510

JUN 12 2012

Dr. Bruce L. Chrisman
Chief Operating Officer
Fermilab
P.O. Box 500
Batavia, IL 60510

Dear Dr. Chrisman:

SUBJECT: NATIONAL ENVIRONMENTAL POLICY ACT (NEPA) DETERMINATION AT FERMI NATIONAL ACCELERATOR LABORATORY (FERMILAB) – FERMILAB MUON CAMPUS, INCLUDING THE MUON TO ELECTRON CONVERSION (Mu2e) EXPERIMENT AND THE MC-1 BUILDING

Reference: Letter, from B. Chrisman to M. Weis, dated June 6, 2012, Subject: NEPA Environmental Evaluation Notification Form (EENF) for the Fermilab Muon Campus, including the Mu2e Experiment and the MC-1 Building

I have reviewed the Fermilab EENF for the Fermilab Muon Campus, including the Mu2e Experiment and the MC-1 Building. Based on the information provided in the EENF, I have approved the following categorical exclusion (CX):

Project Name	Approved	CX
Fermilab Muon Campus, including the Mu2e Experiment and the MC-1 Building	6/8/2012	B1.15, B3.10

I am returning a signed copy of the EENF for your records. No further NEPA review is required. This project falls under categorical exclusions provided in Title 10, *Code of Federal Regulations*, Part 1021, as amended in November 2011.

Sincerely,

Michael J. Weis
Site Manager

Enclosure:
As Stated

cc: P. Oddone, w/o encl.
Y.-K. Kim, w/o encl.
N. Grossman, w/encl.
T. Dykhuis, w/encl.

FERMILAB ENVIRONMENTAL EVALUATION NOTIFICATION FORM (EENF)

for documenting compliance with the National Environmental Policy Act (NEPA), DOE NEPA Implementing Regulations, and the DOE NEPA Compliance Program of DOE Order 451.1

Project/Activity Title: Establishment of a Fermilab Muon Campus (MC) Program, including the Muon to Electron Conversion (Mu2e) Experiment and the MC-1 Building

ES&H Tracking Number: 01090

I hereby verify, via my signature, the accuracy of information in the area of my contribution for this document and that every effort would be made throughout this action to comply with the commitments made in this document and to pursue cost-effective pollution prevention opportunities. Pollution prevention (source reduction and other practices that eliminate or reduce the creation of pollutants) is recognized as a good business practice which would enhance site operations thereby enabling Fermilab to accomplish its mission, achieve environmental compliance, reduce risks to health and the environment, and prevent or minimize future Department of Energy (DOE) legacy wastes.

Fermilab Associate Lab Director, Particle Physics Sector: Greg Bock 6/4/12

Fermilab Particle Physics Sector ES&H Manager: Eric McHugh 6/7/12

Fermilab Associate Lab Director, Accelerator Sector: Stuart Henderson 6/4/12

Fermilab Accelerator Sector ES&H Manager: John Anderson 1 June 12

Fermilab Muon Department Head: Gerald Annala 6/5/12

Fermilab MC-1 Building Project Director: Erik Gottschalk 6/6/12

Fermilab Mu2e Project Manager: Ronald Ray 6/5/12

Fermilab Mu2e ES&H Coordinator: Adrienne Dee Hahn 6/6/12

Fermilab Engineering and Services Section (FESS) Head: Randy Ortgiesen 6-1-12

Fermilab Engineering and Services Section Environmental Officer: Rodney Walton 6/5/12

Fermilab Environment, Safety and Health Director: Nancy L. Grossman 6-4-12

Fermilab Environment, Safety and Health Senior Safety Officer: John P. Cassidy 6/4/12

Fermilab Environment, Safety and Health Radiation Safety Officer: J. Donald Cossairt 6/4/12

Fermilab Environment, Safety and Health Environmental Officer: Eric Mieland 6-4-12

Fermilab NEPA Program Manager: Teri L. Dykhuis 6/4/12

I. Description of the Purpose and Need for the Proposed Action; the Proposed Action; and Alternatives to the Proposed Action

Purpose and Need:

The purpose of the proposed action/project is to establish a Fermilab Muon Campus (see Figure 1 and 2 in Appendix A) Program that would be a base for future muon experiments. The Program currently includes the proposed construction and operation of the Muon to Electron Conversion (Mu2e) Experiment and the proposed construction of the Muon Campus (MC)-1 Building, that would be built in anticipation of the future Muon Gyromagnetic Ratio Measurement (g-2, pronounced g minus 2) Experiment. It is expected that the Muon Campus Program would maximize the synergy between the Mu2e Experiment and the g-2 Experiment and minimize the overall cost of developing them individually due to the ability to share utilities, consolidate infrastructure, and mobilize civil construction concurrently.

The purpose of creating the Mu2e Experiment is to enable scientists to make the most sensitive search ever made for the coherent conversion of muons into electrons in the field of a nucleus, which is an example of 'charged lepton flavor violation' (electrons are 1st generation and muons are 2nd generation leptons). The Mu2e Experiment would provide an advance in experimental sensitivity of four orders of magnitude (10,000 times more sensitive) than previous experiments and it is needed to shed light on the mechanism for generating the observed matter-antimatter asymmetry of the universe. Combined with neutrino program results, the Mu2e Experiment could also help point the way to a unification theory of the fundamental forces of nature. This leap in sensitivity could be achieved with a modest evolution of the existing Fermilab accelerator complex, to create the required intense low energy muon beam; a state-of-the art detector capable of precision measurements in the presence of high rates of conversions; and a new detector hall facility to house the experiment. A successful Mu2e Experiment could be the first step in a world-leading muon-decay program that would "advance fundamental knowledge in high energy physics that would result in a deeper understanding of matter, energy, space and time" which is consistent with the Department of Energy Secretarial Strategic Priority of Science, Discovery, and Innovation.

The purpose of the MC-1 Building is to initially house the anticipated g-2 Experiment that is needed to measure the gyromagnetic ratio "g" of the muon; this ratio is particularly sensitive to any new particles or interactions beyond the Standard Model, the current understanding of elementary particle physics. The building would potentially be repurposed for other future muon experiments that would be suited to an intense muon beam and benefit from the reuse of the existing accelerator system, specifically the recycler and antiproton facilities.

Proposed Action:

To fulfill the purpose and need for the Muon Campus Program, which currently includes the Mu2e Experiment and the MC-1 Building, the following activities are proposed.

Mu2e Experiment

To achieve the sensitivity goal described in the 'purpose and need' for the Mu2e Experiment, a high intensity low energy muon beam coupled with a detector capable of efficiently identifying 105 MeV electrons, while minimizing background from conventional processes, is necessary and the muon beam would be created at Fermilab by an 8 GeV pulsed beam of protons striking a production target.

The components necessary to execute the Mu2e Experiment include a Primary Proton Beam which would require modifications to the Fermilab Accelerator Complex that involve Recycler Ring Modifications, Antiproton Debuncher/Delivery Ring Upgrades, a new Muon Campus External Beamline and Beamline Enclosure; Superconducting Solenoids including the Production, Transport, and Detector Solenoids; a Mu2e Detector; Muon Campus Cryogenic Plant; and a Mu2e Facility comprised of an Underground Detector Hall and a Surface Building at grade level. Proposed activities needed to construct and enable operation of the Mu2e Experiment are as follows:

- **Prepare the Muon Campus Site**, which would include relocation of a portion of Kautz Road to the west to accommodate construction of the Mu2e Building. Additionally, a large portion of the Kautz Road stockpile would be relocated to provide for the realignment of the roadway and the existing high-pressure gas line that parallels the existing roadway would be relocated alongside the new roadway alignment. The roadway and gas line would be made functional prior to construction of the new Mu2e Facility.

To accommodate the future electrical loading requirements of the Muon Campus, an additional high-voltage electrical feeder would be extended to the campus footprint. A new extension of Feeder 24 would be constructed from the Master Substation to the F-3 service area and isolating 4-bay air switches would be installed at these locations to provide for configuration changes. The new feeder cables would be pulled through existing ductbank and no new ductbank construction is expected other than at the location of the new switches.

- **Modify the existing Fermilab Accelerator Complex** to facilitate the transfer of 8 GeV protons from the Fermilab Booster to the proposed Mu2e Detector while the 120 GeV neutrino program is operating (see Figure 3 in Appendix A). To accomplish this, the existing Recycler and Antiproton Debuncher/Delivery Ring (the Antiproton Debuncher Ring would be renamed Delivery Ring for the purposes of the Muon Campus so is referred to here as the Antiproton Debuncher/Delivery Ring) would be modified to re-bunch batches of protons from the Booster and then slow extract beam to the Mu2e Detector (see Figures 3 and 4 in Appendix A).

Primary Proton Beam – The Mu2e Experiment requires a high intensity pulsed proton beam to produce an intense beam of low energy muons with the time structure required by the experiment; Figure 3 illustrates the eventual Fermilab accelerator complex necessary to acquire protons for the Mu2e Experiment. The total number of protons to be delivered on target for the experiment is 1.2×10^{20} per year, corresponding to an average power of about 8 kW. As shown in Figure 4, batches of protons from the existing Booster would be transported to the Recycler Ring for re-bunching via a new Radio Frequency (RF) system and the re-bunched beam would be kicked out of the Recycler into existing transfer lines that would deliver protons to the Antiproton Debuncher/Delivery Ring. A resonant extraction system in the Antiproton Debuncher/Delivery Ring would then slow extract protons to the proposed Mu2e Detector through a new external beamline. The operating scenario and proposed modifications are as follows:

- **Recycler Ring Modifications** - The transport of protons from the Booster to the Recycler Ring would occur via a connection from the MI-8 line to the Recycler Ring. This connection does not currently exist but it, along with construction and installation of a kicker system to inject Booster batches into the Recycler Ring, are part of the *Neutrinos at the Main Injector (NuMI) Off-Axis Electron Nuetrino Appearance Experiment (NOvA)* project scope that would be completed in advance of the Mu2e Experiment. The scope of this work was included in the *NOvA Environmental Assessment/Finding of No Significant Impact.*

  In addition, the Mu2e Experiment would require the ability to re-bunch beam in the Recycler Ring; therefore, a new 2.5 MHz RF system would be installed to divide batches of protons from the Booster into four smaller bunches that would be transferred one-at-a-time to the existing P1 line. A new connection would be made from the Recycler Ring to the P1 line, which currently connects to the Main Injector. A new extraction kicker is also required.

- **Transfer Lines and Antiproton Debuncher/Delivery Ring Injection** - Proton bunches formed in the Recycler Ring would be kicked into the P1 line and transported to the Antiproton Debuncher/Delivery Ring through a series of existing transfer lines. For Mu2e running, protons would traverse the P2, AP1 and AP3 lines before being injected into the Antiproton Debuncher/Delivery Ring by a new injection kicker. The proton bunches would be captured in the Antiproton Debuncher/Delivery Ring by a new 2.4 MHz RF system consisting of RF modules that are identical to the RF modules needed for the Recycler Ring. Stochastic cooling tanks and other equipment used for antiproton production would be removed from the Antiproton Debuncher/Delivery Ring to open up the beam aperture as much as possible.

  The Antiproton Debuncher/Delivery Ring upgrade would improve the aperture of the beam transport line to the Antiproton Debuncher/Delivery Ring, as well as the Antiproton Debuncher/Delivery Ring itself to better serve multiple muon experiments. General improvements would be made to support the transport of 8 GeV protons with a large momentum spread and high repetition rate from the Recycler Ring to the AP0 target or to the Antiproton Debuncher/Delivery Ring. The aperture of the beam line would be increased by replacement of limiting magnets as well as modest improvements of

the optics. These changes would minimize beam loss and allow better transmission efficiency. Small changes in the power systems and beamline enclosure would be required for some of these improvements. Instrumentation would be upgraded to allow operation with higher repetition rates and longer bunch structure.

In the Antiproton Debuncher/Delivery Ring, an injection kicker and septum magnet would be added to allow direct injection of 8 GeV protons, or 3.1 GeV muons from the new Muon Campus beamline. Collider equipment that is no longer necessary would be removed to maximize the aperture. An abort system would be installed that would serve as a standard proton abort for Mu2e, as well as provide the ability to remove unwanted protons from the muon beam circling the Antiproton Debuncher/Delivery Ring. Instrumentation would be upgraded to be compatible with the beam structure specified by future muon experiments. Various improvements would be made to allow for the higher radiation environment that would be present with the operation of the muon experiments, including replacement of magnet cooling hoses and tubing with more radiation resistant materials, and magnet shunts would be relocated to service buildings from their present tunnel locations. Within the scope of the Mu2e project, there would be the addition of local shielding and a Total Loss Monitor system which would be implemented to ensure that the radiation dose to the public is below 1 mrem/year while the muon program is in operation. Finally, upgrades to the electrical panels and service buildings would be implemented to better serve the future power supply systems needed for muon operation. There are some power supplies that would be upgraded as a result of their age and difficulty maintaining.

- **Antiproton Debuncher/Delivery Ring Modifications exclusive to Mu2e** - Mu2e requires slow extracted proton beam to be delivered to the Mu2e Detector. A new resonant extraction system is required that delivers narrow microbunches to the detector that are separated by the revolution period of the Debuncher Ring. The resonant extraction system consists of sextupole magnets, quadrupole magnets, an RF knockout device and an electrostatic extraction septum along with the controls and instrumentation necessary to operate and control the resonant extraction process. Internal shielding at loss points in the beamline tunnel and Debuncher Ring are also required for Mu2e operation.

- **Design and construct a new MC External Beamline and Beamline Enclosure from the Antiproton Debuncher/Delivery Ring to the Mu2e Detector** (see Figure 4 in Appendix A). The MC Beamline Enclosure would consist of the activities required for construction of a below-grade, cast-in-place and/or precast concrete enclosure to house the programmatic beamline components that would be required to transport the proton beam from the existing Antiproton Debuncher/Delivery Ring into the Mu2e Detector Enclosure and MC-1 Building. The MC Beamline Enclosure would be a 10 foot wide by 8 foot high concrete enclosure approximately 700 feet long, running from the existing Antiproton Debuncher/Delivery Ring enclosure to the Mu2e Detector Enclosure. A shortened stub up section would be constructed to transport beam from the Antiproton Debuncher/Delivery Ring enclosure to the MC-1 Building as well. The MC Beamline Enclosure would be designed to support 16 feet of earth and concrete shielding to grade.

  The MC Beamline Enclosure would be flanked with underdrain piping that would negate the hydraulic pressure on the walls and roof of the enclosure and the underdrains would be routed to a duplex sump that would discharge water onto grade and away from the enclosure. The walls and ceiling of the enclosure would be fitted with channel inserts to allow for support of cable trays, cooling water, electrical conduits and fire detection equipment. In addition, convenience outlets and welding outlets would be located along the enclosure, in addition to required emergency and exit lighting, as well as normal light fixtures. The enclosure would be ventilated with neutral dehumidified air and fire detection would be via air sampling and line type sensors.

  The majority of the construction of the MC Beamline Enclosure would utilize traditional 'open cut and cover' methods in which material is removed from the beamline location, the beamline is constructed and the completed enclosure is covered with the excavated material. This method has been used successfully at Fermilab for the construction of the majority of shielded enclosures on-site. For those areas located adjacent to existing utility crossings, an earth retention system would be used.

- **Design and construct the proposed Mu2e Superconducting Solenoid System** (see Figure 5 in Appendix A) consisting of a *Production Solenoid* that contains the target for the primary proton beam, an

S-shaped *Transport Solenoid* that serves as a magnetic channel for pions and muons of the correct charge and momentum range and a *Detector Solenoid* that would house the muon stopping target made from a series of thin foils and the detector elements.

Considerable infrastructure is required to support the operation of the solenoids. This includes power, quench protection, cryogens (liquid nitrogen and liquid helium), control and safety systems as well as mechanical supports to resist the substantial magnetic forces on the magnets.

- **Design and construct a proposed Mu2e Detector** (See Figure 5 in Appendix A) consisting of a tracker, a calorimeter, a stopping target monitor, a cosmic ray veto, an extinction monitor and the electronics, trigger and data acquisition required to read out, select and store the data. The tracker would accurately measure the trajectory of charged particles, the calorimeter would provide independent measurements of energy, position and time, the stopping target monitor would measure the characteristic X-ray spectrum from the formation of muonic atoms, the cosmic ray veto would identify cosmic ray muons traversing the detector region that can cause backgrounds and the extinction monitor would detect scattered protons from the stopping target to determine the fraction of out-of-time beam.

- **Design and construct a Muon Campus Cryoplant.** The Mu2e Experiment would require liquid helium to cool superconducting magnets and therefore a cryogenic facility would be constructed. Existing Tevatron compressors would drive compressed Helium from the Tevatron ring to a low bay attached to the proposed MC-1 Building. The low bay would contain 3 recycled Tevatron satellite refrigerators that could handle the dynamic load and cold lines would run from the refrigerators to the proposed Mu2e Detector Hall/Enclosure.

- **Design and construct a proposed facility (Mu2e Facility) to house the Mu2e Detector and the associated infrastructure** (see Figure 6 in Appendix A). This would include an underground enclosure to house the Mu2e Detector (Mu2e Detector Hall/Enclosure) and a surface building to house necessary equipment and infrastructure that can be accessed while beam is being delivered to the detector. Routing of utilities from nearby locations and installation of new transformers to power the facility would be conducted. The Mu2e Facility would be comprised of approximately 25,000 square feet of new construction space.

MC-1 Building

The proposed MC-1 Building (See Figure 7 in Appendix A) would be a general purpose facility for the study of muon detectors and the internal outfitting would be designed and constructed in order to accommodate the future Muon g-2 Experiment. It would be located within the new Muon Campus, northeast of the existing Antiproton Facility (Antiproton Debuncher/Delivery Ring) and the south side of the facility would be constructed to support the berm required to shield the future beamline for the Mu2e Experiment.

The general building would be comprised of a 13,500 gross square feet facility and the experimental area would consist of an 80 feet by 80 feet high-bay facility with overhead bridge crane and one-story basement area designed to support large loads from accelerator equipment. Equipment access would be from a grade-level loading dock. A one and two story Service Building would include areas for the installation of computing facilities; power supplies; control/counting room; storage space and building support equipment. A one-story 40 feet by 40 feet Refrigeration Room would be included to house refrigeration equipment in support of installed experiments as well as toilet and janitorial services and general space for shop equipment.

Utilities would be tapped from nearby feeders and piping in existing utility corridors, including: electrical, communications, natural gas, industrial cooling water, sanitary sewer, domestic water and chilled water. The facility would be constructed in consideration of potential future Muon Campus construction, including beamline enclosures, refrigeration utilities and the future Mu2e Experiment.

Alternatives:

Alternative Sites

The Brookhaven National Laboratory (BNL) Alternating Gradient Synchrotron (AGS), if suitably upgraded, could be used to provide proton beam for a muon conversion experiment. However, the BNL Muon to Electron Conversion (MECO) proposal that was initiated as a National Science Foundation (NSF) project was cancelled due to the cost of the upgrades and therefore this alternative is not viable.

The Los Alamos National Laboratory (LANL) 800 MeV proton line could be used to produce a secondary beam of muons for a muon conversion experiment. The duty factor of the beam, however, is less than 10 percent which would result in substantially higher instantaneous rates that would require more sophisticated, costly and risky detector technologies so this alternative is not viable.

Conversely, the existing Fermilab accelerator complex could be easily and cost effectively adapted to provide a high intensity proton beam necessary for a muon conversion experiment. In fact, Mu2e is ideally suited to the Fermilab complex because the existing antiproton source (Debuncher/Delivery Ring) could be repurposed since the Tevatron collider run has concluded. Furthermore, the Mu2e Experiment requires high intensity pulses of protons that are separated by roughly twice the muon lifetime in aluminum of 864 nanoseconds and the circumference of the antiproton source is 1,694 nanoseconds, which means that as the protons are traversing the antiproton rings they can be appropriately bunched and prepared for slow-extraction to the detector in a straightforward manner. Additionally, the Fermilab scheme that has been developed would result in a high enough duty factor for the delivery of the proton beam, thus reducing instantaneous rates in the detector and minimizing backgrounds to the signal, which makes it superior from a scientific perspective to the above mentioned alternatives.

A short beamline from the antiproton source to the Mu2e Detector and a new Detector Hall/Enclosure would have to be constructed; however, modifications to the existing Fermilab accelerator complex, to accommodate the Mu2e Experiment, would be modest and would capitalize on the existing DOE investment. Additionally, most, if not all, of the magnets required for the new beamline could be recycled from decommissioned transfer lines associated with the Tevatron collider, thereby making efficient use of existing equipment.

In addition, a second anticipated muon experiment, g-2, proposes to use the Fermilab accelerator complex in a similar way to Mu2e and the substantial overlap between the two experiments would allow for a world class Muon Program at Fermilab that would cost considerably less than that of executing the two experiments independently.

In conclusion, Fermilab's scientific and technical expertise, an existing accelerator facility capable of delivering beam that is essential for the desired science, the cost savings realized from the efficient reuse of equipment and infrastructure, and the synergy with the g-2 experiment preclude an alternative site for the Muon Campus and the Mu2e Experiment in particular.

Alternative Locations on the Fermilab Site

The location of the Mu2e facility just north of the Antiproton source near Kautz Road is dictated by the required length of the external beamline and the location of an existing beamline stub that connects to the Antiproton source. No alternate location on the Fermilab site was therefore viable.

The 'No Action' alternative would not meet the above stated purpose and need.

II. Description of the Affected Environment

The proposed location on the Fermilab site of the Muon Campus (see Figure 1 and 2 in Appendix A) was selected due to the needs of the Mu2e Experiment and the anticipated future g-2 Experiment. The Fermilab location for the Mu2e Experiment was dictated by the programmatic requirement for extraction of a proton beam from the existing Antiproton Facility (Antiproton Debuncher/Delivery Ring for Muon Experiments). The proposed Muon Campus area would occur southwest of Wilson Hall/Enclosure and would be bounded by the Antiproton Facility, Giese Road, Indian Creek, and South Booster Road and bisected by Kautz Road, which would need to be rerouted. The area is previously disturbed upland comprised of gravel parking area, upland fields, and woodland. No regulated wetlands would be impacted by the proposed action and the small, degraded wetlands that would be impacted have minimal wetland function and value. Potential indirect impacts to adjacent regulated wetlands from erosion and sedimentation would be mitigated through the development and implementation during construction of a detailed Storm Water Pollution Prevention Plan and an Erosion Control Plan. There would be no construction in the 100-year floodplain.

The Muon Campus proposed MC Beamline Enclosure (also referred to as the Mu2e External Beamline) would be a 10 foot wide by 8 foot high concrete enclosure approximately 700 feet long, running underground from the

existing Antiproton Debuncher/Delivery Ring Enclosure to a proposed Mu2e Detector Enclosure that would be a below grade concrete structure of approximately 15,000 square feet that would be 25 feet deep.

Construction of the Mu2e Detector Hall/Enclosure would involve excavation of previously disturbed land to provide an underground enclosure to house the Mu2e Detector. An estimated 30,000 cubic yards of soil would be excavated for the Mu2e Detector Enclosure and 20,000 cubic yards for the External Beamline. Spoils from excavation would be placed in a temporary pile at the construction site until the construction is complete and then used for backfill, soil shielding, and piled along the length of the underground Mu2e External Beamline enclosure to provide a 16 foot berm for the beamline. Any remaining spoils would be placed on one of the onsite stockpiles or disposed off-site. The placement of the new facilities would necessitate relocation of approximately 1000 feet of the existing Kautz Road to the west by a maximum of approximately 250 feet. Diversion of Kautz Road would involve excavation of approximately 36,000 cubic yards and surface grading in an area of previously disturbed land. A building would also be constructed on the surface directly above the enclosure and utilities would be routed from nearby locations to the new Detector Hall/Enclosure. All construction and debris waste would be disposed of by Fermilab and appropriate material would be sent to a recycling vendor.

Utilities would be run from several locations through previously disturbed soil as follows:

- 13.8 kV power would be run approximately 500 feet to the Mu2e Detector Hall/Enclosure from the MC-1 Building area. Power to the Muon Campus would be extended from the loop that currently circles the Antiproton Area (Debuncher/Delivery Ring).
- Low Conductivity Water (LCW), Chilled Water (CW) and Sanitary Sewer (SS) would be run approximately 600 feet to the Mu2e Detector Hall/Enclosure from the Central Utility Building. Some of the Low Conductivity piping corridor between the Central Utility Building (CUB) and the Antiproton Area would be replaced. LCW to the MC-1 Building and the Mu2e Facility would be through the new beamline enclosure. The existing lift station at the Antiproton Area (Debuncher/Delivery Ring) would be removed and connecting piping to the existing tie-ins would be reconnected to a new sanitary lift station installed at the MC-1 Building. The Mu2e Facility would tie into this new lift station.
- Industrial Cooling Water (ICW), Drinking Water System (DWS), and natural gas (NG) would be run approximately 150 feet each from the existing corridor along relocated Kautz Road. The relocation of Kautz Road would also repositions the ICW, DWS and NG.

Construction of the Mu2e Detector would take place at various locations around Fermilab, at collaborating institutions and in industry in the US and possibly abroad. Final assembly and installation of the detector would take place at Fermilab but would not involve any digging, trenching, demolishing or conventional construction.

The Mu2e beam intensity in the Antiproton Facility (Debuncher/Delivery Ring) would increase from that of the previous Tevatron collider program in which between 4E12 and 5E12 antiprotons passed through the Antiproton complex every day. For Mu2e operations there would be approximately 4E12 protons contained in every Booster batch and approximately 130,000 Booster batches would pass through the Antiproton complex every day, which corresponds to a beam power of about 8 kW. In comparison, the total beam power out of the Booster is 70 kW and the *NuMI* beam power in the *NOvA* era would be 700 kW (see *NovA Environmental Assessment/Finding of No Significant Impact* for more information).

Three service buildings, known as AP-10, AP-30 and AP-50, sit above the Antiproton Facility beamline enclosure (See Figure 2 in Appendix A). The shielding between the top of the beamline enclosure and the floor of the service buildings was sufficient during Tevatron collider operations; however, the shielding in the three service buildings would need to be upgraded for Mu2e operations at a beam power of 8 kW. The deployment of a network of Total Loss Monitors (TLMs) would minimize beam losses and local shielding of known loss points in the beamline enclosure would be implemented. Additionally, the beam current can also be turned down until the losses fall well below the DOE regulatory limits. This is similar to the strategy currently employed in the Fermilab Booster, a more complex machine that runs at substantially higher beam currents.

The 8 GeV proton beam would strike a production target located inside the Production Solenoid. This area would be similar to a target vault for a typical fixed target experiment at Fermilab. The layout in this area is shown in Figure 5 of Appendix A. A map of the residual activation levels in this area that results from the interaction of the proton beam with the production target is shown in Figure 8 of Appendix A. The activation level at the outside surface of the iron yoke surrounding the Production Solenoid is a few mSv/hour. Simulations of Mu2e beamline

operations indicate that ground water activation would be a factor of 10 to 100 times below the regulatory limits and therefore in a range typical to Fermilab experiments. Tritium and other short-lived radionuclides are produced as a normal by-product of beamline operations. The airborne radionuclides produced by the Mu2e beam would be released into the atmosphere through a vent stack to the surface; however, these emissions would be limited by minimizing the ventilation of the area during beam operations. Ventilation would be maximized for personnel access, but only after allowing sufficient time for decay of radionuclides after beam shutdown. The air from the ventilation system would be monitored for radionuclide emissions. The expected dose rate at the site boundary due to Mu2e operations would be an order of magnitude lower than the dose rate due to operation of the NuMI facility for NOvA, which is well below the regulatory limit.

The heat shield that would protect the Production Solenoid from particles produced in the production target would be cooled by a closed loop water system. The water would become radioactive over time. Tritium, 7Be and activated corrosion products are the only radioisotopes that would survive for any substantial duration as the others would decay away on the timescale of a few hours. Most of the 7Be would be trapped in de-ionization bottles. The water would be monitored and replaced at appropriate intervals.

Residual magnetic fields would be present in the detector enclosure when the superconducting solenoids are powered. The magnetic field immediately outside the Transport Solenoid is estimated to be about 5 kG, falling off to about 1 kG at a distance of 100 centimeter. Access would be restricted within a few meters of the solenoids when they are powered and warnings would be posted for people with pacemakers.

Components of the Mu2e Detector would be procured, fabricated and tested at existing facilities at Fermilab, other collaborating institutions and in industry. The main component of the detector is a series of large superconducting solenoids operating at liquid helium temperatures. Particle physics detectors, including drift chambers, scintillating crystals and plastic scintillator would be installed inside and around the outside of one of the solenoids. Liquid helium and liquid nitrogen would be used to maintain the operating temperature of the solenoids. In their natural state, helium and nitrogen are gasses that can displace oxygen and would pose an oxygen deficiency hazard and a freezing hazard in the event of a major leak in the detector hall/enclosure. However, Fermilab has extensive experience with similar systems and appropriate safety measures, based on that experience, would be incorporated into the design and planning of this new experiment.

MC-1 Building

The proposed site has been examined and is not in any wetlands, defined flood plain or other protected area. It would involve excavation that would create temporary spoils to be stored adjacent to the project site; spoils not used as backfill would be disposed on site and erosion control measures would be implemented during construction. All construction waste and debris would be properly managed by Fermilab and appropriate materials would be sent to a recycling vendor.

III. Potential Environmental Effects (Comments/clarification provided for each checked item in Section IV.)

A. Sensitive Resources: Would the proposed action result in changes and/or disturbances to any of the following resources?

- ☐ Threatened or endangered species
- ☐ Other protected species
- ☒ Wetland/Floodplains
- ☐ Archaeological or historical resources
- ☐ Non-attainment areas for Ambient Air Quality Standards

B. Regulated Substances/Activities: Would the proposed action involve any of the following regulated substances or activities?

- ☒ Clearing or Excavation
- ☒ Demolition or decommissioning
- ☐ Asbestos removal
- ☐ PCBs
- ☐ Chemical use or storage

- ☐ Pesticides
- ☒ Air emissions
- ☒ Liquid effluents
- ☐ Underground storage tanks
- ☒ Hazardous or other regulated waste (including radioactive or mixed)
- ☒ Radioactive exposures or radioactive emissions
- ☐ Radioactivation of soil or groundwater

C. Other relevant Disclosures

- ☐ Threatened violation of ES&H permit requirements
- ☐ Siting/construction/major modification of waste recovery or TSD facilities
- ☐ Disturbance of pre-existing contamination
- ☒ New or modified permits
- ☐ Public controversy
- ☐ Action/involvement of another federal agency
- ☐ Public utilities/services
- ☐ Depletion of a non-renewable resource

IV. Comments on checked items in section III.

Wetland/Floodplains

No regulated wetlands would be impacted under the proposed action and the small area of degraded wetlands, which would be impacted, has minimal wetland function or value. Potential indirect impacts to adjacent regulated wetlands from erosion and sedimentation would be mitigated through the implementation during construction activities of a detailed Storm Water Pollution Prevention Plan and an Erosion Control Plan. There would be no construction in the 100-year floodplain.

Planning Resources Inc. performed a delineation of wetlands for the area of the proposed Muon Campus site. The wetland delineation was conducted in accordance with the 'Interim Regional Supplement to the Corps of Engineers Wetland Delineation Manual: Midwest Region (COE 2008)' and the wetland delineation and reporting guidance provided by the Chicago District Corps of Engineers on April 13, 2010. The Corps of Engineers reviewed the results of the wetlands study and determined that these low quality wetlands are exempt from their permit program; therefore, a Department of the Army permit under Section 404 of the Clean Water Act is not required and impacts would not constitute an extraordinary circumstance.

Clearing and Excavation

Clearing and excavation would be necessary for this project. It is anticipated that there would be approximately 36,000 cubic yards excavated for the diversion of Kautz Road; 30,000 cubic yards of soil excavated for the Mu2e Detector Hall/Enclosure; 20,000 cubic yards for the External Beamline; and 9000 cubic yards for the MC-1 Building. About 34,000 cubic yards of the excess soil would be stockpiled on the Fermilab site or disposed off-site and the remainder would be used for backfill and soil shielding for the beamline.

Demolition or Decommissioning

Concrete demolition of the antiproton ring would be required at the interface with the new external beamline; this interface would be approximately 10 feet by 8 feet and the waste would be placed in the soil backfill near the source.

After the useful life of the project has ended, there would be a need for Decommissioning and Dismantling. To the extent possible, components would be reused and materials would be evaluated for reuse and recycle. Resultant waste materials would be managed appropriately and according to all applicable rules and regulations for packaging, transporting, disposal, records management, and reporting.

Air Emissions

During excavation and construction of the Mu2e Detector Hall/Enclosure, the operation of construction equipment and vehicles would be expected to introduce SO_2, NO_x, particulates and other criteria pollutants to the atmosphere, typical of similar sized construction projects. These are mobile sources and therefore do not require a permit, nor would they affect the site wide operating permit. Particulates (dust) generated during earthmoving

activities and vehicle movement over unpaved areas would be minimized by watering or other dust-control measures.

Airborne radionuclides would also be produced by the Mu2e beam during operation of the experiment and would be released into the atmosphere through a vent stack to the surface. Air emissions would be limited by minimizing the ventilation of the area during beam operations. Ventilation would be maximized for personnel access, but only after allowing sufficient time for decay after beam shutdown. Air from the ventilation system would be monitored for radionuclide emissions. The dose rate at the site boundary due to Mu2e operations would be an order of magnitude lower than the dose rate due to operation of the NuMI facility or NOvA, which is well below the regulatory limit. Any necessary modifications to the Fermilab Lifetime Operating Permit (issued by the IEPA Air Bureau) would be obtained prior to beginning work.

Liquid Effluents

Liquid effluents would result from pumping groundwater that seeps into the underground portions of the Mu2e external beamline and experimental hall/enclosure to the surface ponds at Fermilab. The ponds may discharge to streams that flow offsite. The resulting concentration of radionuclides would be a factor of 500-1000 times below the regulatory limits.

Roof and parking lot drains would empty into storm water drainage systems and all other liquid effluents would be discharged to the sanitary sewer system. Work planning, experimental review, and safety inspections are the three methods for ensuring that hazardous effluents do not enter the sanitary waste stream.

Hazardous or other regulated waste (including radioactive or mixed)

Beamline elements and detector components may become activated during operation of the Mu2e experiment. A cool down period would be required before decommissioning could begin. All commonly reused valuable equipment such as magnets would be stored. Small amounts of lead, in the form of thin sheets, may be used as part of the calorimeter system and these sheets may become mildly activated and would have to be disposed of as mixed waste.

Radioactive Exposures or Emissions

Airborne radionuclides would be produced by the Mu2e beam and would be released into the atmosphere through a vent stack to the surface. Emissions would be limited by minimizing the ventilation of the area during beam operations. Ventilation is maximized for personnel access, but only after allowing sufficient time for decay after beam shutdown. Air from the ventilation system would be monitored for radionuclide emissions. The dose rate at the site boundary due to Mu2e operations would be an order of magnitude lower than the dose rate due to operation of the NuMI facility for NOvA, which is well below the regulatory limit. This may require modification of existing permits.

The 8 GeV proton beam would strike a production target located inside one of the superconducting solenoids. This area would be similar to a target vault for a typical fixed target experiment at Fermilab. The layout in this area is shown in Figure 5 of Appendix A. A map of the residual activation levels in this area that results from the interaction of the proton beam with the production target is shown in Figure 8 of Appendix A. The activation level at the outside surface of the concrete shielding surrounding the Production Solenoid is a few mSv/hour. Simulations of Mu2e beamline operations indicate that ground water activation would be a factor of 10 to 100 times below the regulatory limits and therefore in a range typical to Fermilab experiments.

A safety assessment document (SAD) module would be developed that would address radiation exposures to workers and members of the public due to the operation of Mu2e. The SAD would also address the potential radioactive emissions due to the proposed project. Personnel and public exposures would remain well below regulatory limits (Fermilab designs facilities for potential exposures of 10 mrem per year, while the regulatory limit is 100 mrem per year to the public per DOE Orders 458.1) and within guidelines of the Fermilab Radiological Control Manual including the control of occupational radiation exposures during maintenance activities. Radionuclide emissions would be monitored and reported in accordance with existing practices and regulatory requirements. Cumulative air emissions are expected to remain substantially below the National Emission Standards for Hazardous Air Pollutants (NESHAPs) threshold for continuous monitoring and far below the regulatory limit for effective dose to members of the public.

New or Modified Permits

All work activities would be evaluated to determine the necessity of permits and these would be obtained prior to construction. Specifically, expected radionuclide emissions would be evaluated to determine the necessity of a change to the site wide air operating permit.

Additional Information
The proposed Muon Campus is not in the vicinity of any cultural resources previously identified in the Fermilab Cultural Resources Management Plan. If any unexpected potential archaeological/historical/cultural resources are encountered, work would be stopped and the resource would be evaluated as per legal requirement.

The project would incorporate sustainable design principles into all phases of planning, design, and construction and follow Leadership in Energy and Environmental Design (LEED) guiding principles, however, because the facilities would not be occupied on a regular basis, LEED-Gold certification is not appropriate and would not be pursued.

V. NEPA Recommendation

Fermilab staff have reviewed this proposed action and concluded that the appropriate level of NEPA determination is a Categorical Exclusion. The conclusion is based on the proposed action meeting the categorical exclusion descriptions found in DOE's NEPA Implementation Procedures, 10 CFR 1021, Subpart D, Appendix B1.15 and B3.10, and that no extraordinary circumstances are anticipated.

B1.15 states the following: Siting, construction or modification, and operation of support buildings and support structures (including, but not limited to, trailers and prefabricated and modular buildings) within or contiguous to an already developed area (where active utilities and currently used roads are readily accessible). Covered support buildings and structures include, but are not limited to, those for office purposes; parking; cafeteria services; education and training; visitor reception; computer and data processing services; health services or recreation activities; routine maintenance activities; storage of supplies and equipment for administrative services and routine maintenance activities; security (such as security posts); fire protection; small-scale fabrication (such as machine shop activities), assembly, and testing of non-nuclear equipment or components; and similar support purposes, but exclude facilities for nuclear weapons activities and waste storage activities, such as activities covered in B1.10, B1.29, B1.35, B2.6, B6.2, B6.4, B6.5, B6.6, and B6.10 of this appendix.

B3.10 states the following: Siting, construction, modification, operation, and decommissioning of particle accelerators, including electron beam accelerators, with primary beam energy less than approximately 100 million electron volts (MeV) and average beam power less than approximately 250 kilowatts (kW), and associated beamlines, storage rings, colliders, and detectors, for research and medical purposes (such as proton therapy), and isotope production, within or contiguous to a previously disturbed or developed area (where active utilities and currently used roads are readily accessible), or internal modification of any accelerator facility regardless of energy, that does not increase primary beam energy or current. In cases where the beam energy exceeds 100 MeV, the average beam power must be less than 250 kW, so as not to exceed an average current of 2.5 milliamperes (mA).

VI. DOE/CH-FSO NEPA Coordinator Review

Concurrence with the recommendation for determination:

U.S. DOE Fermi Site Office (FSO) Manager: Michael J. Weis

Signature _____

Date 6/12/2012

U.S. DOE FSO NEPA Coordinator Reviewer: Rick Hersemann

Signature Rick Hersemann

Date 6/7/12

APPENDIX A – Figures

Figure 1 The proposed Muon Campus is included in the red circle, superimposed on the Fermilab site.

Figure 2 The Fermilab Muon Campus including the Mu2e Facility, the MC-1 Building, the Muon Campus Beamline berm, and the former Antiproton Facility Buildings (AP-30, AP-10, and AP-50)

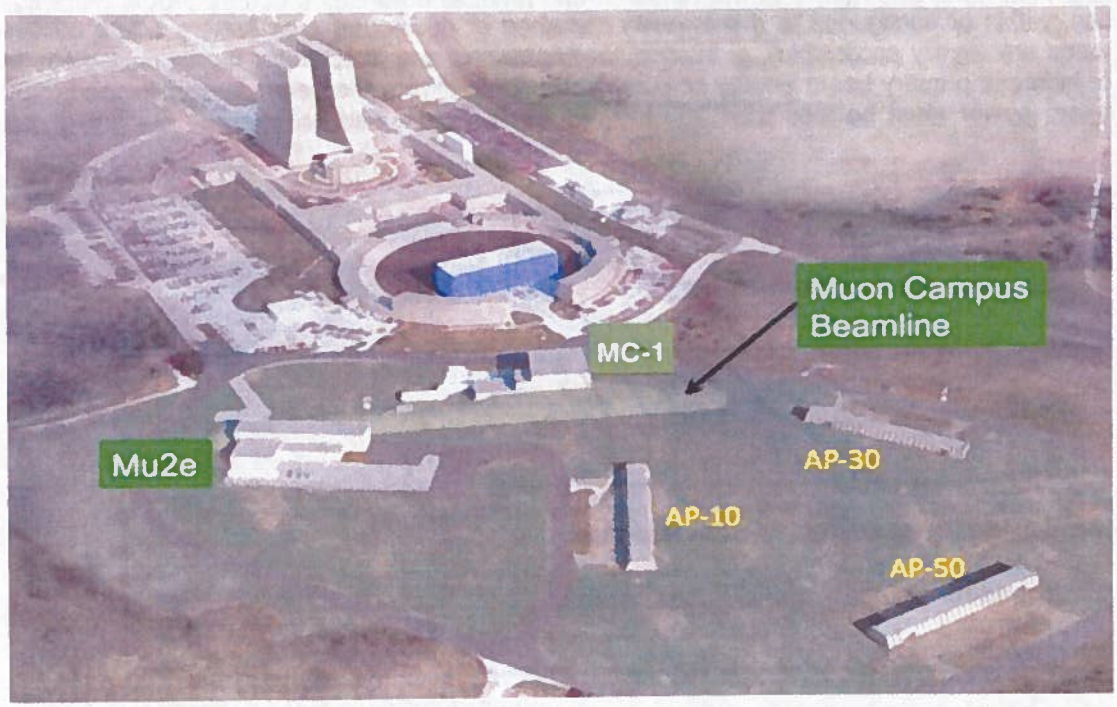

Figure 3 The components of the Fermilab accelerator complex that would be used to acquire protons for the Mu2e experiment. The proton beam path from Booster to Recycler is shown in yellow; the beam path in the Recycler is in red; the beam path from Recycler to Delivery Ring (otherwise called the Antiproton Debuncher Ring) is in blue; and the beam path from Delivery Ring to Mu2e target is in green.

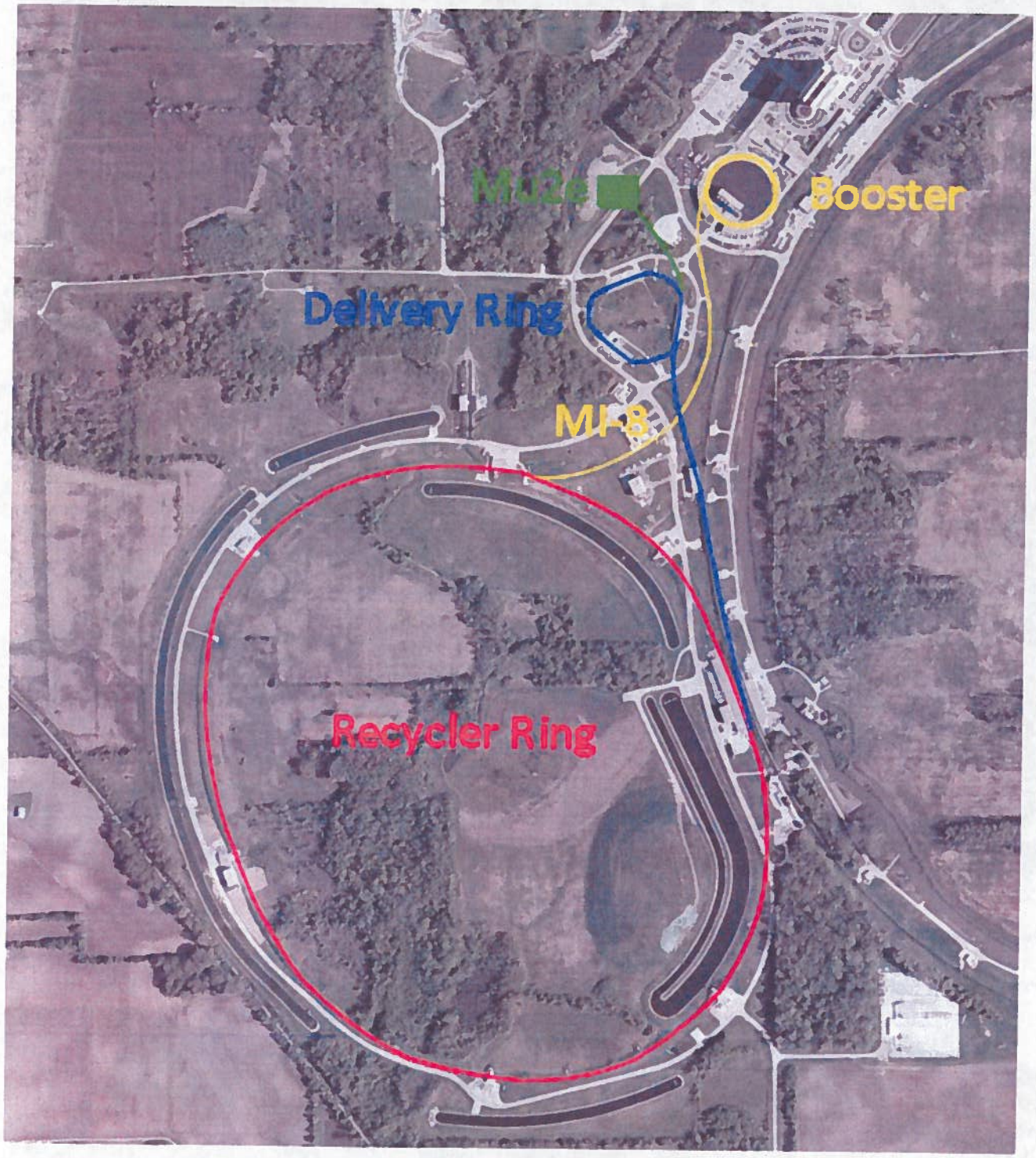

Figure 4 The path of protons from the Fermilab Booster (round figure at the forefront of the photo) to the Mu2e Detector

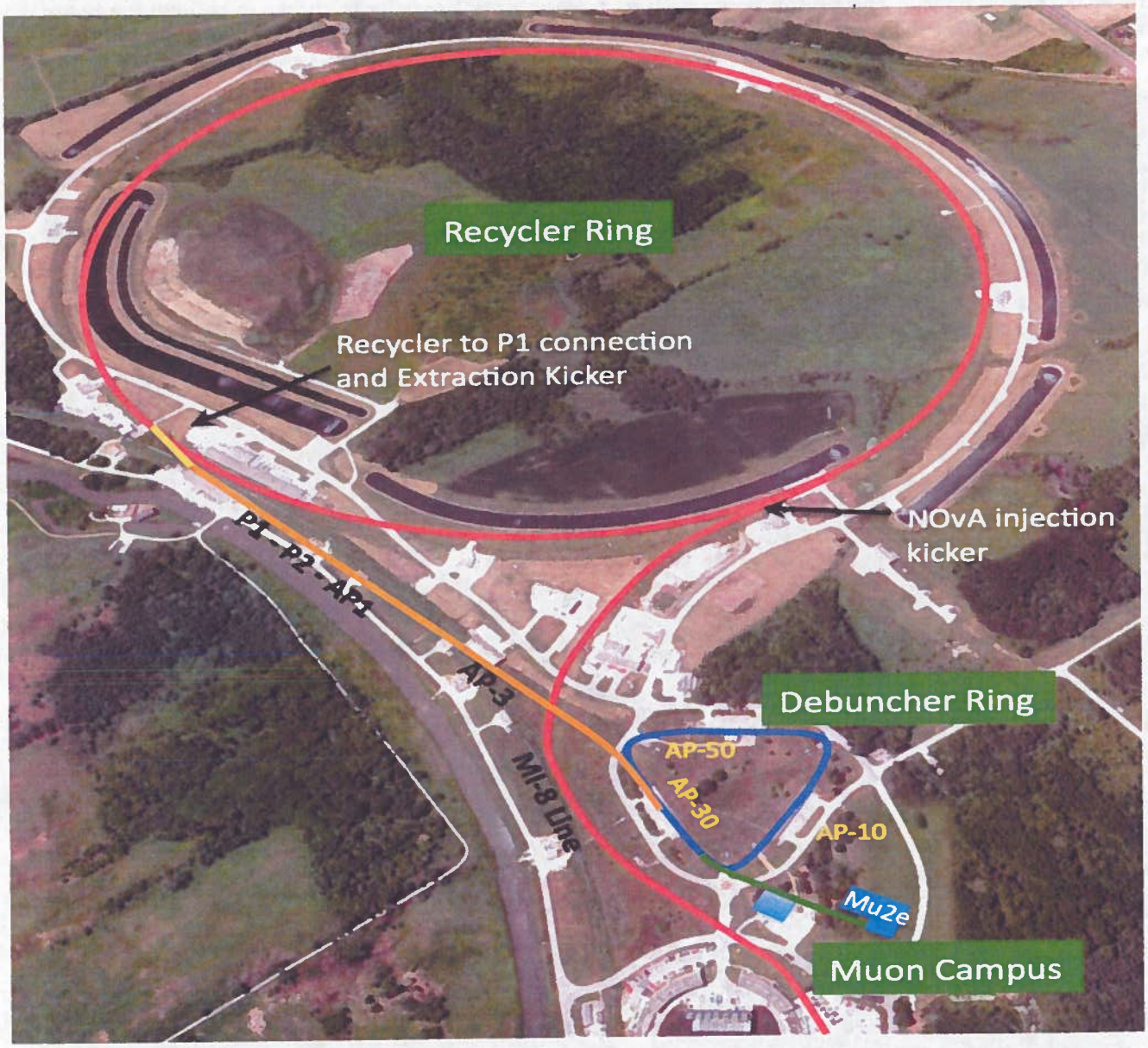

Figure 5 Depiction of the Mu2e Experiment Solenoids

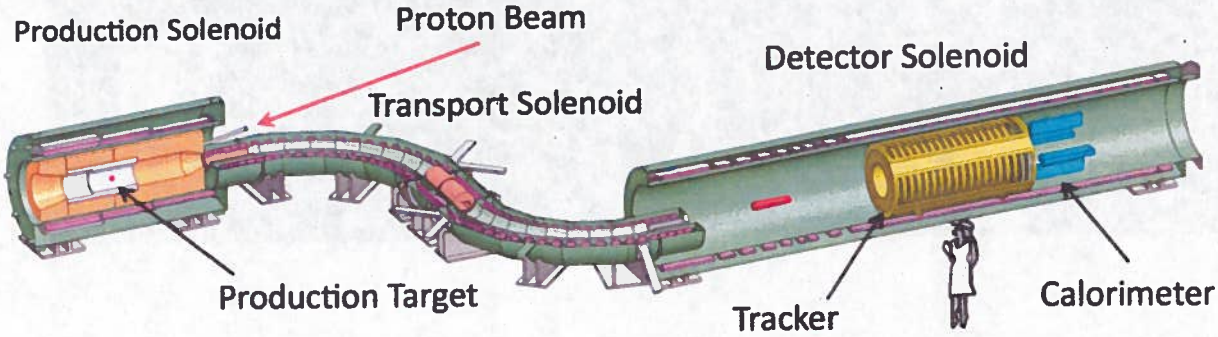

Figure 6 Depiction of the above-grade portion of the Mu2e Facility

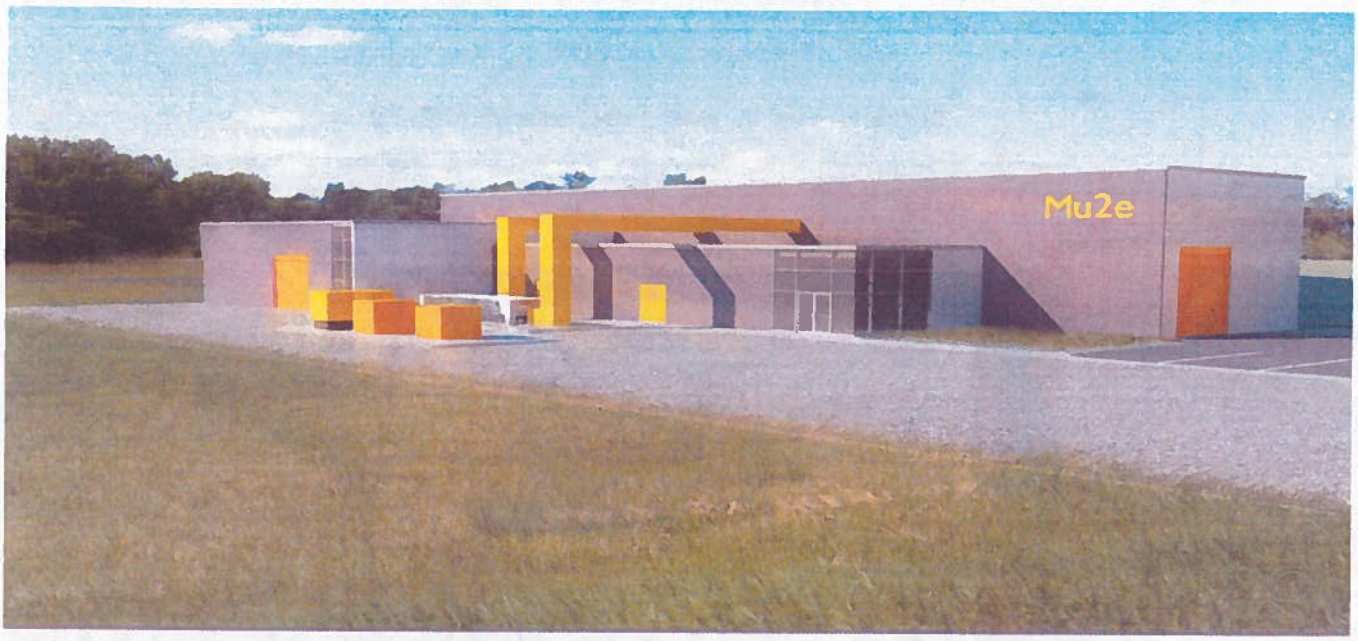

Figure 7 Depiction of the above-grade portion of the MC-1 Building
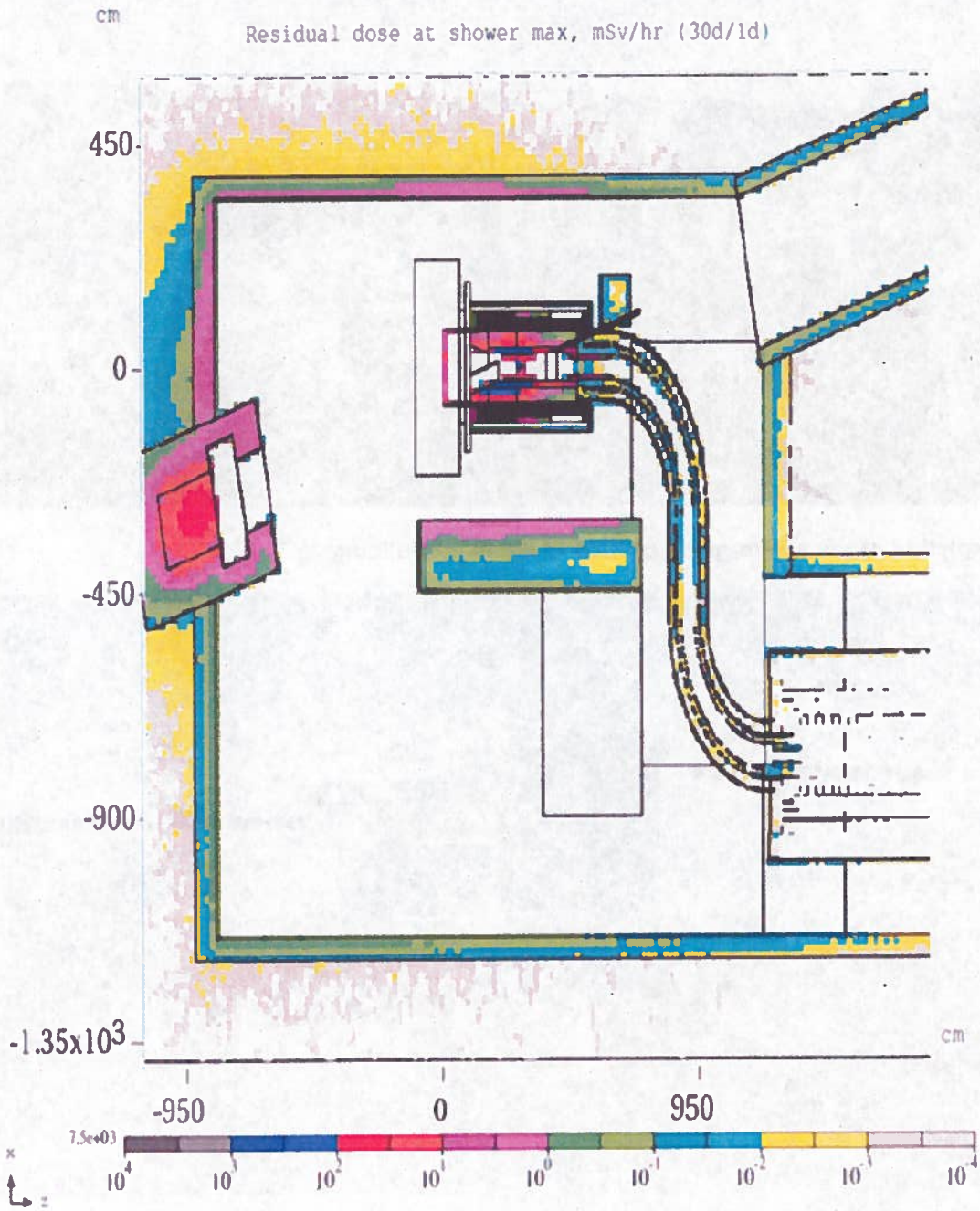
Figure 8 Residual activation expected in the area around the Mu2e Production Solenoid. At the surface of the surrounding walls and the peak residual activation is a few mSv/hour