ESD safety refresher notes

Donna Kubik
26April2016

Refresher outline

- What is ESD?
- Causes of ESD
  - Static electricity
  - Electrostatic induction
- ESD damage prevention
  - Prevention of ESD damage due to static electricity
    - Proper garments
    - Wrist straps and shoe grounders
    - Static dissipative mats and floor mats
    - Humidity control
    - Ionizers
  - Prevention of ESD damage due to electrostatic induction
- Tools for ESD safety

What is ESD?

- Electrostatic discharge is often referred to as ESD.
- ESD is the sudden flow of electricity between two electrically charged objects.
- Lightning is large-scale ESD event.
- Less dramatic ESD events may be neither seen, heard, or felt, yet are still large enough to cause damage to sensitive electronic devices.

Warning symbol denoting a device's susceptibility to electrostatic discharge.

Categories of ESD damage

- Two categories of damage from ESD are *catastrophic damage* and *latent damage.*
- In the case of latent damage, the electronic device appears to be working fine following the ESD event.
- However, the sensitive circuitry has been damaged and could fail to operate properly at some time in the future.
- Since we cannot know with certainty whether latent damage has occurred, the best we can do is can do is apply as many ESD-safe procedures as possible.

The need to practice ESD-safe procedures

- There is no substitute for careful procedure.
- Therefore we must follow all ESD safety procedures very carefully to minimize the chance of damaging ESD-sensitive devices.
  - *Continuous monitoring* of wrist strap and work surface and/or floor mat grounding
  - Wear ESD-safe garments
  - Set up an ESD-safe workspace

Continuous monitors

- The wrist strap monitors we currently use in most areas at Sidet are single conductor monitors
- A person can be thought of as a plate of a capacitor with the other plate being ground.
- The "plates" are separated by an insulator as shoes and mats.
- The person and the resistors built into the wrist strap and connecting cords form the resistor.
- The monitor will alarm if a secure ground is not present.

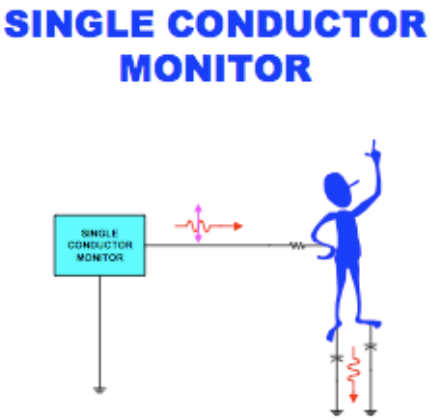

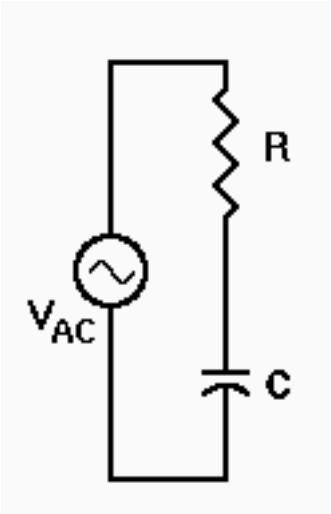

Causes of ESD

Causes of ESD

- Two causes of ESD events are
  - Static electricity
  - Electrostatic induction

Static electricity

Static electricity

- Static electricity is often generated through tribocharging, the separation of electric charges that occurs when two materials are brought into contact and then separated. This is called the *triboelectric effect.*

- Examples of tribocharging include walking on a rug, rubbing a plastic comb against dry hair, rubbing a balloon against a sweater, or removing some types of plastic packaging.

- In all these cases, the breaking of contact between two materials results in tribocharging, thus creating a difference of electrical potential that can lead to an ESD event.

Triboelectric effect

- How does an imbalance of charge get created?
- One very common way is to rub two objects together.
- If they are made of different materials and are both insulators electrons may be transferred from one to the other.
- The more rubbing, the more electrons move, and the larger the static charge that builds up.
- This is called the triboelectric effect
  'Tribo' means 'to rub'.

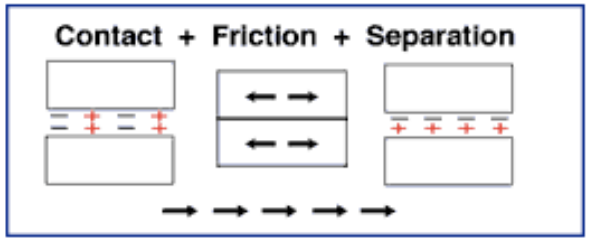

- Note: It is not the rubbing or friction that causes electrons to move.
- It is simply the contact between two different materials.
- Rubbing just increases the contact area between them.

Triboelectric series

- When we rub two different materials together, which becomes positively charged and which becomes negative?
- Materials have been ranked according to their ability to hold or give up electrons.
- This ranking is called the triboelectric series.
- When 2 materials are rubbed together, the one higher on the list will give up electrons and become positively charged.

TRIBOELECTRIC SERIES

your hand
glass
your hair
nylon
wool
fur
silk
paper
cotton
hard rubber
polyester
polyvinylchloride plastic

Why does your hair stand up after you put on a wool sweater?

- When you put on your sweater, it rubs against your hair.
- Electrons move from your hair to the sweater. (Hair is above wool on the tribolectric series)
- Now each of the hairs has the same positive charge.
- Things with the same charge repel each other.
- So the hairs try to move away from each other.
- The farthest apart they can get is to stand up and away from all the other hairs.

Electrostatic induction

Electrostatic induction

- Electrostatic induction occurs when an electrically charged object is placed near a conductive object isolated from the ground.
- Induction charging occurs without actually touching the object to any other charged object.
- The presence of the charged object creates an electrostatic field that causes electrical charges on the surface of the other object to redistribute.
- Even though the net electrostatic charge of the object has not changed, it now has regions of excess positive and negative charges.
- An ESD event may occur when the object comes into contact with a conductive path.
- For example, charged regions on the surfaces of styrofoam cups or bags can induce potential on nearby ESD sensitive components via electrostatic induction and an ESD event may occur if the component is touched with a metallic tool or electronic device.

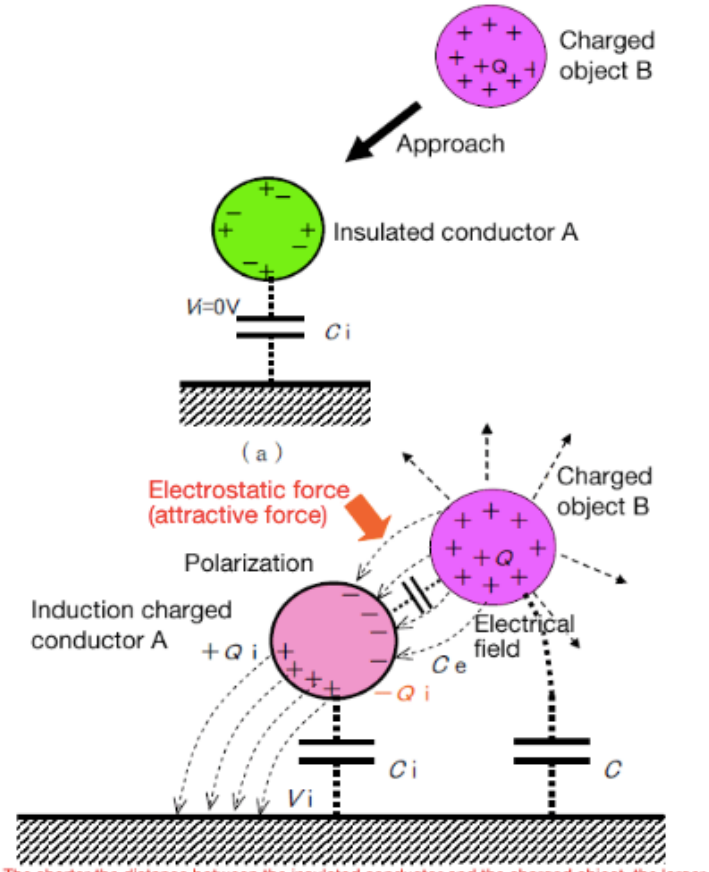

The shorter the distance between the insulated conductor and the charged object, the larger is the quantity of electric charge induced by conductor A.

ESD damage prevention

Prevention of ESD damage due to static electricity

Prevention of ESD damage due to static electricity

- Wear garments with conductive filaments or garments that are static dissipative, as Tyvek.
- Wear conducting wrist straps and foot straps to prevent high voltages from accumulating on your body.
- Use static dissipative table mats and/or conductive flooring materials to conduct harmful electric charges away from the work area.
- Humidity control. Humid conditions prevent electrostatic charge generation because the thin layer of moisture that accumulates on moist surfaces serves to dissipate electric charge.
- Ionizers are sometimes used to inject ions into the ambient airstream. Ionization systems help to neutralize charged surface regions on insulators and dielectric material.

Basic ESD-safe workstation

- A 1 MΩ resistor is ALWAYS used to connect wrist straps and table and floor mats to ground.
- This is to protect people from shock and to protect devices from being exposed to excessive power.
- Discharging a device too quickly can result in exposing the device to too much power: power = energy/time.
- It is better to drain charge slowly. This is facilitated by the 1 MΩ resistor.

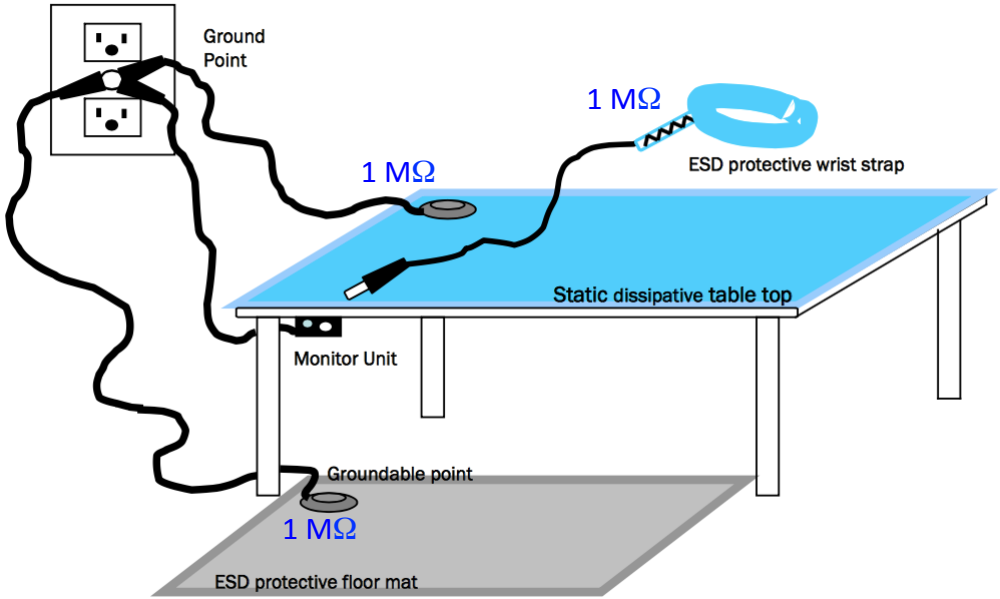

Static dissipative

- Materials which are conductive (e.g. stainless steel surfaces) are not recommended for use as a static-safe work surface; the low electrical resistance could result in a transient-like (surge) discharge of static electricity. A rapid discharge is far more damaging to the electronic device than a gradually paced discharge through a static dissipative material.

- Work surfaces should be static dissipative.

- Static dissipative materials have a low enough sheet resistance (10^5-10^9 ohms per square) to allow electrostatic charge to flow across its surface but at a slow-enough rate.

- This slower neutralization of charge prevents damage to devices which cannot tolerate a sudden flow of static charge from the device to a grounded mat.

Ohms Per Square	Material	Description
$> 10^{13}$	Insulative	Insulators and Base Polymers. Not an ESD material
10^9 to 10^{12}	Anti-Static	Initial charges are suppressed. Typically pink color.
10^5 to 10^9	Dissipative	No or low initial charge. Prevents discharge to or from human contact
10^3 to 10^5	Conductive	No initial charge. Provides path for charge to bleed-off. Typically black color.
1 to 10^3	Shielding	

Humidity helps, but it is not enough.

- At Sidet we require a minimum of 35% relative humidity for work on ESD-sensitive devices
- If it is very dry, a charge can build up to extraordinary levels, up to tens of thousands of volts!
- If it is humid, a charge imbalance will not persist for long time.
- However, as the table shows, triboelectric charging persists at levels that can damage devices, even at high relative humidity.
- *Humidity control reduces triboelectric charging, but humidity control does not eliminate the need for all of the conventional ESD safeguards!*

Table I - Typical Electrostatic Voltage

	Electrostatic Voltages	
Means of Static Generation	10-20 percent Relative Humidity	65-90 percent Relative Humidity
Walking across carpet	35,000	1,500
Walking over vinyl floor	12,000	250
Worker at bench	6,000	100
Vinyl envelopes for work instructions	7,000	600
Common poly bag picked up from bench	20,000	1,200

Air ionizers

- Air ionizers are useful when working with materials like quartz, glass, plastic, and ceramic which are inherently charge generating because these materials are insulators; this charge cannot be easily removed by grounding.

- *However, like humidity control, air ionization should only be one part of controlling ESD in work environments.*

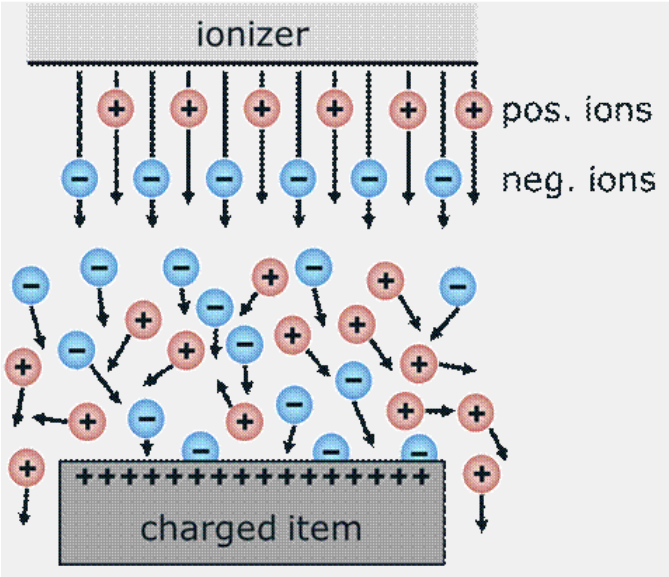

Principle of neutralization of a charged object by an ionizer that generates negative and positive ions:

The like-charged ions are repelled from a charged object while the opposite-charged ions are attracted to the surface of a charged object, neutralizing the object

Prevention of ESD damage due to electrostatic induction

Prevention of ESD damage due to electrostatic induction

- Insulating materials prone to triboelectric charging should be kept *more than 3 feet away* from sensitive devices to prevent accidental charging of devices through electrostatic induction.

Examples of materials to keep away from an ESD-safe workbench

Tools

How to test if materials are static dissipative and if they are prone to triboelectric charging?

- A static locator can be used to determine if an item is prone to tribolelectric charging and should therefore be kept away from ESD-sensitive devices.
- A megohmmeter can be used determine if surfaces are static dissipative.
- These instruments are available upon request from Donna Kubik (kubik@fnal.gov)

Static locator

Megohmmeter

Thank you!