FESHM 6010: FIRE PROTECTION PROGRAM

Revision History

Author	Description of Change	Revision Date
Jim Niehoff	Added the Fire Protection Design Guides, Changed ESH&Q to ES&H, and changed FPE to FP-AHJ. Added definition of pyrophoric materials & reference DOE Handbook 1081.	August 2019
Jim Niehoff	Added reference to DOE Standard 1066 & ESHQS-SA1 Procedure; Added regular facility fire inspections to Section 3.15 Responsibilities Matrix; Added FESHM Chapter 2005, ORC to Section 4.2. Updated Appendix A to latest codes and standards and Added Appendix B, Overview of Site-Specific Fire Protection Program	May 2018
Jim Niehoff	Added applicability statement for Fermilab Leased Spaces.	December 2017
Jim Priest & Jim Niehoff	Added Wildfire and updated NFPA references in Technical Appendix. Updated template and changes to reflect the laboratory's reorganization, i.e., changed SSO to DSO.	September 2015
Jim Priest & Jim Niehoff	Added SAD & User definitions; Removed term "Elements" from chapter title; Applied the FESHM Template; Incorporated references to other section's documents comprising the lab's Fire Protection Program; Updated Technical Appendix A with recent code editions	March 2013

DRAFT

TABLE OF CONTENTS

1.0 INTRODUCTION 5

2.0 DEFINITIONS 5

3.0 ROLES & RESPONSIBLILITIES 6

3.1 Laboratory Directorate 6
3.2 Division/Section Heads/ Project Manager 6
3.3 Building Manager 7
3.4 Environment, Safety, and Health (ES&H) 7
3.5 ES&H- Fire Protection AHJ 7
3.6 Fermilab Fire Department 8
3.7 Fermilab Security Department 8
3.8 Communications Center 8
3.9 Facilities Engineering Service Section (FESS) Engineering Department or Project 9
3.10 FESS Fire Systems Maintenance (FSM) Technicians 9
3.11 FESS Facility Management\Operations & Maintenance 9
3.12 FESS Services\Roads and Grounds 9
3.13 Division Safety Officer 9
3.14 Users/Experimenters (Everyone) 9
3.15 Responsibilities Matrix 10

4.0 PROGRAM 10

4.1 Design of Fire Protection Systems 10
4.2 Users/Experimenters Reviews 11
4.3 Highly Protected Risk – Facility Inspections 11
4.4 Inspection and Maintenance of Fire Protection Systems (Irregularity Report System) 11
4.5 Facility Incident Monitoring and Communication 11
4.6 Response to Fire Emergencies 12

5.0 REFERENCES 12

6.0 TECHINCAL APPENDIX A: INSPECTION, TESTING AND MAINTENANCE OF FIRE PROTECTION SYSTEMS 13

FSM 17

7.0 TECHINCAL APPENDIX B: OVERVIEW OF SITE-SPECIFIC PROGRAM 27

8.0 TECHINCAL APPENDIX C: FIRE PROTECTION DESIGN GUIDES 31

I. Introduction 33

DRAFT

A. Definitions 33
B. Applicable Codes & Standards 34

II. Experiments and Accelerator Operations 36

A. Reference Material 36
B. Operational Readiness Clearance (ORC) 36
C. Flammable Gas: 36
D. Foam boards: 36
E. Wood 37
F. Storage of wood or plastic pallets or packing material 37
G. Plastics 37
H. Cable Jackets 38
- Plenum (CMP) Rated Cable 38
- Riser (CMR) Rated Cable 38
- General Purpose (CM, CMG, CMx) Cable 38
- Other Cable Ratings: 38

I. Current Protection for both AC and DC Powered Installations (Fire/Smoke Hazard) 39
J. Rack Protection 39
K. Summary 39

III. Facility Safety 40

A. Design Considerations 40
B. Design Criteria and Evaluation 40
C. Installation, Fabrication, and Construction 44

IV. Fire Alarm 45

A. Design/Construction Submittals 45
B. Design Criteria and Evaluation 45
C. Installation, Fabrication, and Construction 47

V. Automatic Sprinkler Systems 48

A. Design/Construction Submittals 48
B. Design Criteria and Evaluation 48
C. Products, Materials, and Equipment 49
D. Installation, Fabrication, and Construction 50

VI. Special – Fixed Fire Extinguishing Systems 51

A. Design/Construction Submittals 51
B. Design Criteria and Evaluation 51
C. Products, Materials, and Equipment 51
D. Installation, Fabrication, and Construction 51

DRAFT

VII. Fire Extinguisher 52

A. Design/Construction Documents 52
B. Design Criteria and Evaluation 52
C. Products, Materials, and Equipment 52
D. Installation, Fabrication, and Construction 52

Attachment A 53

Attachment B - Water Supply 62

DRAFT

1.0 INTRODUCTION

The objective of US Department of Energy (DOE) is to provide a level of safety protection consistent with "highly protected risk" class of Industrial risks. This objective requires significant facilities and processes to be protected by an overlapping combination of robust fire protection physical features, highly developed emergency response capabilities, and well organized programmatic and procedural infrastructures. Such measures often promote fire protection mitigation to a greater degree than building and fire codes. In addition, there is an expectation for these various fire safety constructs to interlace with other safety programs and systems to create an overarching safety environment within DOE's Integrated Safety Management System (ISMS).

To that end, the 6000 series of the Fermilab Environment, Safety, and Health Manual (FESHM) chapters describe the organization and structure of the laboratory's fire protection program. This program is to provide a level of fire protection and fire suppressions capability sufficient to minimize losses from fire and related hazards consistent with the best protected class of industrial risks, that is, Highly Protected Risk (HPR). Other related FESHM chapters include, but are not necessarily limited to, 1010, 1050, 1070, 2001, 2005, and 2010.

This chapter only applies to the Fermilab site. Leased spaces will follow the rules and regulations set forth by the partnering institute and/or state or local codes and standards.

2.0 DEFINITIONS

- **International Code Council (ICC)** – recognized publisher of building and fire codes.
- **Building Manager** - Designated employee for each building on site that will serve as the contact point for all activities that will affect that building as a result of daily operations or services requested from both internal and external sources.
- **Fermilab Fire Department (FFD)** – Individuals of an organization trained and tasked with emergency care, preventing, and extinguishing fires, and other emergency responses, such as Oxygen Deficiency Hazard (ODH).
- **Fire Hazard Subcommittee (FHS)** – Subcommittee of the Fermilab ES&H Committee is delegated the Alternate Authority Having Jurisdiction (AHJ) in absence of the primary AHJ, FP-AHJ approved by Fermi Site Office (FSO). The FHS is responsible for fire safety, life safety aspects of facilities, processes and experiments, and flammable and compressed gas systems.
- **Fire Protection AHJ (FP-AHJ)** – Is delegated as the primary Authority Having Jurisdiction (AHJ) and approved by FSO. The FP-AHJ shall be highly trained and educated professional responsible for overseeing the overall implementation and development of the Fermilab fire protection program.
- **Fire Systems Maintenance (FSM) Technician** – Individuals trained in the inspection, testing, and minor maintenance of fire protection systems throughout the Laboratory (including Water Based Systems, Fire Alarm Systems, and Special Hazards Systems).
- **FIRUS - Facility Incident Reporting and Utility System** - Lab-wide system that monitors building fire alarm systems and transmits alarms to the Communications Center in Wilson Hall.
- **Highly Protected Risk (HPR)** - A facility that is characterized by a level of fire protection of the best protected class of industrial risks.

DRAFT

- **Irregularity Report** - A form issued by FESS Fire Systems Maintenance (FSM) technicians and Fermilab Fire Department (FFD) personnel to communicate critical deficiencies in fire protection systems to the ES&H Fire Protection AHJ (ES&H-FP-AHJ). The form is presented in chapter 6010.
- **Landlord** - The Division/Section (D/S) responsible for the facility or space where work is planned or occurring.
- **NFPA – National Fire Protection Association** – Organization dedicated to fire safety through creating consensus standards and codes.
- **ORC & TSW** – Operational Readiness Clearance (ORC) and Technical Scope of Work (TSW).
- **Prescribed Fire** – Any fire ignited by management actions under certain, predetermined conditions to meet specific objectives related to hazardous fuels or habitat improvement.
- **Prescribed Fire Plan (Burn Plan)** – A document/procedure providing the information needed to implement an individual prescribed fire project.
- **Pyrophoric Material** – Gas, liquid, or solid form, are capable of spontaneous ignition at low temperatures. Pyrophoric materials, regardless of their state, may spontaneously ignite when exposed to air at normal or slightly elevated temperatures. Many pyrophoric material are also highly reactive with water or moist air.
- **Safety Assessment Document (SAD) Accelerator Readiness Review Documentation** - A formal review document describing the analysis of Fermilab projects, operations and experiments for hazards and their final method of mitigation.
- **Division Safety Officer (DSO)** - An individual who is assigned duties as the principal ES&H advisor to the division/center/section head.
- **Users/Experimenters** – Individuals responsible for maintenance and operation of an experiment.
- **Wildland Fire** – Any nonstructural fire, other than prescribed fire, that occurs in wildland.

3.0 ROLES & RESPONSIBLILITIES

3.1 Laboratory Directorate

- Overall responsibility for the fire protection program rests with the Director's Office.
- The Director assures that adequate resources are available to carry out the elements of the fire protection program as delineated in this chapter.

3.2 Division/Section Heads/ Project Manager

- Implementation and continuing operation of the fire protection program within the areas for which they have responsibility. This includes assuring that all assessments, inspections, tests, and maintenance of fire detection and suppression equipment are conducted by support organizations in accordance with the requirements hereafter set forth.
- General facility audits or audits of inspection reports, irregularity reports, or other documentation (e.g., using the Self-Assessment process as defined by Fermilab Quality Assurance Manual Chapter 12080) to ensure compliance with the various elements of the Fire Protection Program.

DRAFT

- For all fire protection system designs, it is the responsibility of the landlord. The D/S is to assure that reviews are performed which assure that a satisfactory level of protection is being provided, that the installation is satisfactory, that acceptance tests are adequate to assure proper operation of the fire protection system, and that the system has been properly tested.
- Division/Section/Project personnel must periodically audit their fire protection systems through the Tripartite Assessment process.
- Ensuring the ORC is followed per FESHM Chapter 2005.
- Ensuring appropriate preventative measures are in place to prevent spontaneous ignition of pyrophoric materials, reference DOE Handbook 1081, 2014, Primer on Spontaneous Heating and Pyrophoricity.

3.3 Building Manager

- The Building Managers assigned to specific buildings within each D/S is responsible for periodic inspections of fire protection system components in accordance with Technical Appendix A.
- Any deficiencies noted during the inspections must be corrected by 1) creating a requisition or work order to correct the condition or 2) contacting the FESS FSM technicians, FFD, or ES&H-FP-AHJ directly for immediate assistance.
- Manage the emergency preparedness, including exiting and evacuation plans, drills, and readiness in accordance with FESHM 2050.

3.4 Environment, Safety, and Health (ES&H)

- The ES&H FP-AHJ reviews all fire protection system designs to assure that (1) a satisfactory level of protection is being provided, (2) the applicable fire protection provisions of the IBC International Building Code, the International Fire Code, and National Fire Protection Association Standards (NFPA) are being met, (3) the installation plan is satisfactory, and (4) acceptance tests are adequate to assure proper operation of the fire protection systems. ES&H is responsible for documenting these reviews.
- The ES&H Section will periodically audit fire protection systems as part of the tripartite assessment process.

3.5 ES&H- Fire Protection AHJ

- Assists FESS\Engineering Department or Project as requested during the design, installation, testing, and acceptance of fire protection systems.
- Reviews civil construction drawings and participants in the ORC & TSW processes as delineated in FESHM Chapter 2005.
- Conducts periodic assessments of Fermilab facilities to evaluate compliance of each facility with the requirements of the best protected class of industrial risks, or highly protected risks (HPR).
- Monitors system operation, effectiveness, and failures (including the FIRUS system) found during routine testing via the Irregularity Report system and audits.
- Reviews Fermilab Fire Department (FFD) Run Reports.

DRAFT

- Shall be notified by telephone, regardless of day or time, of all significant FFD Runs involving:
  - Loss of water protection (i.e. broken water lines).
  - Loss of electrical power resulting in fire detection and/or FIRUS systems relying on backup power.
  - Any fire related event that results in physical damage to structures or equipment that had the potential for endangering personnel.
- Notification of the ES&H-FP-AHJ will be made by the Communications Center upon direction of the Senior Fire Department Officer. This notification will not be made ahead of any time- urgent emergency response notifications or efforts.

3.6 Fermilab Fire Department

- Responds to fire emergencies.
- Assists the FESS FSM technicians by performing required testing of the fire protection systems, as specified in Technical Appendix A. They will issue Irregularity Reports as required.
- Generates a Fire Department Run Report, which documents the details of all responses to fire alarms and emergencies.
- Conducts a general fire inspection for all buildings semi-annually and issues a report of findings to the Division/Section DSO.
- Conducts a general inspection of all fire pump rooms monthly.
- Performs fire inspections, see FESHM Chapter 6015 for further details.
- Inspects all Village housing units semi-annually (includes alarm systems, CO detectors, GFCI tests, and fire extinguishers) and issues a report to the Building Manager.
- Reviews and oversees the Hazard Map Program.
- Maintain the Baseline Needs Assessment in conjunction with the ESHQ-FP-AHJ.
- May participate in reviews and witnessing of fire protection system testing.

3.7 Fermilab Security Department

- Oversees and directs the operation of the Communications Center, including testing of FIRUS (see Technical Appendix A).

3.8 Communications Center

- Monitors FIRUS on a 24-hour basis.
- Dispatches emergency response personnel as directed by received FIRUS messages.
- Notifying Duty personnel (FSM Techs, Mechanics, Electricians, etc.) as directed by received FIRUS messages.
- Maintains appropriate and accurate call lists for all D/S buildings.
- Informs personnel on specified call lists referenced on received FIRUS messages.
- Provides timely status updates to the ES&H-FP-AHJ and Fire Department when reported FIRUS problems cannot be resolved in a timely manner.

DRAFT

- Provides timely status updates to the ES&H-FP-AHJ and Fire Department when unexpected issues arise with the FIRUS system.

3.9 Facilities Engineering Service Section (FESS) Engineering Department or Project

- The Facilities Engineering Services Section engineering staff (FESS-Eng) or project staff provides design and consulting services, and oversees the installation and acceptance testing of fire protection systems for both new construction and modifications to existing facilities. "Turn-key" services may occur in which case the Laboratory is purchasing these services from a vendor.

3.10 FESS Fire Systems Maintenance (FSM) Technicians

- Responsible for the inspection, testing and maintenance activities for all installed fire protection systems throughout the Laboratory as specified in Technical Appendix A.
- They will issue Irregularity Reports, as required.

3.11 FESS Facility Management\Operations & Maintenance

- FESS Operations personnel provide maintenance and testing for the underground water mains and fire hydrants, as well as other duties specified in Technical Appendix A.

3.12 FESS Services\Roads and Grounds

- Maintains and implements the prescribed fire program as part of the land management program.

3.13 Division Safety Officer

- The DSO, or designee for each division, will review Fire Department Run Reports and investigate the incident as needed.
- Reviews the Building Fire Inspection Report issued by the FFD and aids in correcting any findings, as appropriate.

3.14 Users/Experimenters (Everyone)

- Monitors areas for fire safety. Call Facilities Engineering Services Section (FSM ext. 2924) regarding problems with fire protection systems.
- Provides information about unresolved fire safety problems to the ES&H-FP-AHJ.

DRAFT

3.15 Responsibilities Matrix

	DIR	D/S/P	BM	DSO	AD	FESS **	ES&H-FP-AHJ	FFD
Overall Responsibility	X	X						
FPS Audit		X					X	
FPS Design/Review		X				X	*	*
FPS Installation		X				X	*	*
FPS Testing		X				X	*	*
FPS Acceptance		X				X	*	*
FPS Code & Compliance Review						X	X	*
FPS Maintenance/Test/ Inspection		X	X			X		X
FIRUS Maintenance					X			
Comm Center								X
Fire Incident Response								X
FFD Run Reports				X			X	X
Irregularity Reports						X	X	X
Fire Safety Inspections								X
HPR Assessments							X	*
Prescribe Fire Program						X	*	X

** may participate*
***may also be Project's Responsibility*
FPS denotes Fire Protection System

4.0 PROGRAM

The fire protection program encompasses all aspects of fire protection at the Laboratory. The program includes fire prevention practices and procedures, quality construction, protecting buildings and facilities with fixed fire detection and suppression systems, procedures for testing and maintenance of fire protection systems and equipment, providing firefighting devices as appropriate, providing adequate water supplies for fire control, a system of oversight that ensures that DOE orders and mandatory standards applicable to fire protection are met, a staffed and equipped fire department, and most importantly, participation by all personnel from the directorate level down to managers, scientists, engineers, technicians, and supporting employees.

With regard to facilities, the "code of record" (the code in effect at the time of design) is in effect for the life of the facility. The current code will apply to the facility in the event of a major renovation or if a significant hazard endangers the building occupants as determined by the Environment, Safety, & Health, Section's Fire Protection AHJ.

4.1 Design of Fire Protection Systems

- Fire Protection system designs undergo the review process detailed in FESHM 2010. FESHM 2001 procedures are also used to review project design and drawings of both new construction

DRAFT

and modifications to existing facilities, including fire protection systems. These projects may be completed by subcontractors or may be "turn-key" services from a vendor.

- The ES&H-FP-AHJ reviews all fire protection system designs to assure that (1) a satisfactory level of protection is being provided, (2) the applicable fire protection provisions of the International Building Code, the International Fire Code, and National Fire Protection Association Standards (NFPA) are being met, (3) the installation plan is satisfactory, and (4) acceptance tests are adequate to assure proper operation of the fire protection systems. The ES&H-FP-AHJ is responsible for documenting these reviews.

4.2 Users/Experimenters Reviews

- The ES&H-FP-AHJ reviews experiments though ORC/TSW process to assure a satisfactory level of protection is being provided and that the applicable fire protection provisions of the International Building Code, the International Fire Code, and National Fire Protection Association Standards (NFPA) are being met. The ES&H-FP-AHJ is responsible for documenting these reviews.
- Flammable liquids, gases and other hazardous materials are to be evaluated to ensure the safety of building occupants and documented and reviewed through the SAD and FHS Subcommittee, reference FESHM Chapters 2005, 2010, and 6020.3.

4.3 Highly Protected Risk – Facility Inspections

- Fermilab maintains facilities that are characterized as a “best protected” class of industrial risk (Highly Protected Risk), equipped with an appropriate level of fire protection.
- Inspection frequency depends on the mission criticality of a facility to Fermilab. The loss of those facilities that would have an adverse impact on the Laboratory would have a higher frequency of inspection. Inspection schedules ranges from annually to once every 5 years. The ES&H-FP-AHJ oversees the inspection process and maintains the inspection schedule.

4.4 Inspection and Maintenance of Fire Protection Systems (Irregularity Report System)

- Technical Appendix A specifies the schedule and responsibilities for the inspection, testing and maintenance activities for all installed fire protection systems throughout the Laboratory. Building Managers that detect serious irregularities must notify the FSM Technicians of those conditions. FSM technicians (and FFD) must submit all irregularities (using the Irregularity Report System) to the ES&H-FP-AHJ. The FSM technicians or ES&H-FP-AHJ will communicate with the affected division/section and suggest corrective strategies. The D/S must then document the deficiency in iTrack and make the needed corrections.

4.5 Facility Incident Monitoring and Communication

- The Facility Incident Reporting and Utility System (FIRUS), a proprietary supervising station system, monitors fire protection, security and utility systems at Fermilab. FIRUS system alarms are monitored in the Fermilab Communications Center (Comm Center), located on the ground floor of Wilson Hall. The Comm Center also receives telephone calls reporting fires. The Comm Center dispatches the FFD and security personnel. The Security Department

DRAFT

oversees and directs the operation of the Comm Center. The FFD generates a Fire Department Run Report, which documents the details of all responses to fire alarms and emergencies. The ES&H-FP-AHJ and the affected Division Safety Officer reviews the Fire Department Run Reports and investigates as needed.

4.6 Response to Fire Emergencies

The FFD and Security will respond to all fire emergencies. If needed, additional assistance will be provided by nearby municipal fire departments.

5.0 REFERENCES

- 10 CFR 851 Worker Safety and Health Program
- 29 CFR 1910.164 and 1910.165 Other Fire Protective Systems
- 29 CFR 1926.24 Fire Protection and Prevention, 1926.34 Means of Egress
- US Department of Energy Standard 1066, Fire Protection, 2016 Edition
- US Department of Energy Handbook 1081, Primer on Spontaneous Heating & Pyrophoricity, 2014
- International Building Code (IBC), 2015
- International Fire Code (IFC), 2015
- National Fire Protection Association (NFPA)
- ES&H Emergency Management Procedure Manual
- FESHM 2040 Emergency Management Program
- Fermilab's Facilities Engineering Services Section's Design Guides
- Fermilab's Facilities Engineering Services Section Fire System Maintenance Procedures
- Fermilab's Facilities Engineering Services Section Prescribe Fire (Burn Plan)

Additional Fire Protection Programs and their associated FESHM chapters are:

- 6011 – Periodic Testing of Emergency Lights, Exit Signage, & Site-wide Emergency Alert
- 6012 – Periodic Inspection of Fire Doors
- 6013 – Facility Incident Reporting Utility System (FIRUS)
- 6014 – Fire Watch
- 6015 – Highly Protected Risk Inspection Program
- 6016 – Hazard Map Program (Pre-Incident Planning)
- 6020.1 – Placement of Portable Fire Extinguishers in Primary Beam Enclosures
- 6020.2 – Welding, Burning, and Brazing (Welding, Burning, and Brazing Permit)
- 6020.3 – Storage and Use of Flammable Gases
- 6020.4 – Concepts of Egress
- 6020.5 – Flammable & Combustible Liquids
- 6030 – Disablement of Fire Protection Systems and Other Related Safety Systems
- 6040.1 – Fire Construction Requirements – Fire Retardant for Combustible Materials
- 6040.2 – Fire Construction Requirements – Interior Finish Requirements
- 6040.3 – Protection of Openings in Fire Rated Assemblies
- Highly Protected Risk, A Best Practice – Developed by EFCOG Fire Protection Task Group, October 24, 2017

DRAFT

6.0 TECHINCAL APPENDIX A: INSPECTION, TESTING AND MAINTENANCE OF FIRE PROTECTION SYSTEMS

The following matrices address the NFPA code requirements for inspection, testing and maintenance of fire protection systems installed at Fermilab. The requirements of the following standards are included:

AWWA M14 Distribution Valves Selection, installation, field testing and maintenance, 2006 edition

FM 2-81 Factory Mutual Global, Fire Protection System Inspection, 2012 edition

NFPA 12 Standard on Carbon Dioxide Systems, 2015 edition
NFPA 12A Standard on Halon 1301 Fire Extinguishing Systems, 2015 edition
NFPA 13 Standard for the Installation of Sprinkler Systems, 2016 edition
NFPA 14 Standard for the Installation of Standpipe and Hose Systems, 2013 edition
NFPA 15 Standard for Water Spray Fixed Systems for Fire Protection, 2012 edition
NFPA 17 Standard for Dry Chemical Extinguishing Systems, 2013 edition
NFPA 17A Standard for Wet Chemical Extinguishing Systems, 2013 edition
NFPA 20 Standard for the Installation of Centrifugal Fire Pumps, 2013 edition
NFPA 24 Standard for the Installation of Private Fire Service Mains & Their Appurtenances, 2013 edition
NFPA 25 Standard for the Inspection, Testing, & Maintenance of Water-Based Fire Protection Sys., 2017
NFPA 72 National Fire Alarm & Signaling Code, 2016 edition
NFPA 80 Standard for Fire Doors and Other Opening Protective, 2015 edition
NFPA 90A Standard for the Installation of Air-Conditioning & Ventilating System, 2015 edition
NFPA 101 Life Safety Code, 2015 edition
NFPA 110 Standard for Emergency & Standby Power Systems, 2013 edition
NFPA 204 Standard for Smoke and Heat Venting, 2015 edition
NFPA 221 Standard for Fire Walls and Fire Barrier Walls, 2015 edition
NFPA 750 Standard on Water Mist Fire Protection Systems, 2015 edition
NFPA 1962 Standard for the Inspection, Care & Use of Fire Hose, Couplings & Nozzles, 2013 edition
NFPA 2001 Standard on Clean Agent Fire Extinguishing Systems, 2015 edition

FESHM 6011 Periodic Testing of Emergency and Exit Lights
FESHM 6012 Periodic Testing of Fire Doors
FESHM 6013 Facility Incident Utility System (FIRUS)

The specific testing methods or inspection procedures can be obtained from the ES&H Fire Protection Engineer, the FESS Fire System Maintenance Group, or the Fermilab Fire Department.

Abbreviations are as follows:

HPR	Highly Protected Risk, reference FESHM 6015
FSM	Fire Systems Maintenance Group
FFD	Fermilab's Fire Department
ES&H	ES&H Fire Protection Staff
COMM	Communications Center
BM	Building Manager, reference FESHM 2050
DSO	Division Safety Officer, reference FESHM 2010
FESS-OPS	FESS Facilities Management Department's Operations Group

**Frequency or method deviates from Code or Standard*

DRAFT

RECOMMENDED NFPA TESTING FREQUENCIES MATRIX - WATER BASED SYSTEMS

ITEM	CODE REFERENCE	ACTIVITY	FREQUENCY	RESPONSIBILITY
SPRINKLER SYSTEMS NFPA 25				
Sprinkler head	5.21	Inspection	*At same frequency as HPR assessment. (Floor-level visual examination of a representative sample)**	ES&H
Spare sprinkler head	5.2.1.3	Inspection	*At same frequency as HPR assessment**	FSM
Sprinkler Head	5.3.1	Testing	*Sample tests: Standard sprinkler 50 years, or quick response 20 years, dry pendent/sidewall 10 years*	FSM
Sprinkler System Piping	5.2.2	Inspection	*At same frequency as HPR assessment**	ES&H
Pipe hangers	5.2.3	Inspection	*At same frequency as HPR assessment**	ES&H
Gauges, wet pipe system	Table 5.1.1.12	Inspection	FFD Quarterly, FSM Annually	Building Manager; FFD and FSM during testing.
Gauges, dry pipe system	13.2.7.13.2	Inspection	FFD Quarterly, FSM Annually	Building Manager; FFD and FSM during testing.
Hydraulic nameplate on sprinkler systems	5.2.5	Inspection	*At same frequency as HPR assessment**	ES&H
Antifreeze System Solutions	5.3.3	Test	Annually	FSM
Dry Pipe System Compressors & Air Dryers	5.4.2 5.4.2.4	Maintenance	Annually	FSM
STANDPIPE & HOSE SYSTEMS NFPA 25 and NFPA 1962				
Control Valves, locked or supervised	Table 13.1.1.2	Inspection	FFD Quarterly, FSM Annually BM Monthly	Building Manager, FFD and FSM
Piping	Table 6.1 6.2.1	Inspection	*At same frequency as HPR assessment**	ES&H
Hose Connections, Non-restricting	13.6.1	Inspection	Quarterly	FFD
Hose Connections, Non-pressure reducing attached to Sprinkler System	13.4.6.2.2.1	Test	Every three years – (This only applies to Class III hose connections, Fermilab has Class I	Not applicable

DRAFT

ITEM	CODE REFERENCE	ACTIVITY	FREQUENCY	RESPONSIBILITY
			hose services installed in NuMI Tunnel & Wilson Hall	
Hose Connections, Non-pressure reducing	13.6	Maintenance	As needed based on FFD inspection	FSM
Hose (Valve) Connections, Pressure restricting	13.6.1	Inspection	Annual Exercise – See NFPA Interpretation normal valve – FMS has documentation	FSM
Hose Connections, Pressure reducing	13.5.2	Test Full Flow	Every five years	Not applicable
Hose Connections, Pressure reducing	13.5.3	Test Partial Flow	Annually	Not applicable
Hose Connections, Pressure reducing	13.5.3.2.1	Maintenance	As needed based on FFD inspection	FSM
Hose	Table 6.1.1.2	Not Applicable	Not Applicable	All Class III hoses from cabinets have been removed
Hose Nozzles	6.2.6	Not Applicable	Not Applicable	All Class III hoses from cabinets have been removed
Hose storage	6.2.7	Not Applicable	Not Applicable	All Class III hoses from cabinets have been removed
Flow Test	6.3.1	Test	5 Years	FESS/Engineering and FSM
Main Drain Test	6.3.1.6	Test	Annually	FSM
PRIVATE FIRE SERVICE MAINS NFPA 25				
Hydrants (dry barrel)	7.2.2.4	Inspection	Monthly	FFD
Hydrants (dry barrel)	7.3.2, 7.4.2 Table 7.5.1	Flush and Maintenance	Annually	FESS/Operations
Mainline Strainers	7.2.2.3	Inspection	*Monthly 16-inch strainers at Casey's, configured with automatic backwash**	FESS/Operations
Mainline Strainers	Table 7.5.1	Maintenance	*Annually and after significant flow if inspection indicates need**	FESS/Operations
Piping (exposed)	Table 7.1.1.2	Inspection	*Daily at pump house**	FESS/Operations
Piping	Table 7.1.1.2	Flow Test	5 years or after significant change	ESHQ-FP-AHJ
FIRE PUMPS NFPA 25				

DRAFT

ITEM	CODE REFERENCE	ACTIVITY	FREQUENCY	RESPONSIBILITY
Pump House, heating	8.2.2(1)	Inspection	Weekly	FESS/Operations
Pump House, ventilating louvers	8.2.2(1)	Inspection	Weekly	FESS/Operations
Fire Pump System	8.2.2(2)	Inspection	Electric Monthly, Diesel Weekly (Based on NFPA 25 2011 Edition)	FESS/Operations
Pump Operations, no flow condition	8.3.1	Test	Weekly	FESS/Operations
Pump Operations, flow condition	8.3.3.1	Flow Test	Annually – Except churn test to be conducted every 3 years – Reference Schirmer Engineering's Letter on file with FMS	FSM/Contractor
Electrical System	8.5	Maintenance	Annually	FESS/Operations
Controller	8.5	Maintenance	Annually	FESS/Operations
Motor	8.5	Maintenance	Annually	FESS/Operations
WATER SPRAY FIXED SYSTEMS NFPA 25				
Drainage, Inspection	10.2.8	Inspection	*Annually – The presence or lack of adequate drainage will not affect the ability of the system to extinguish fire; it is a secondary effect only, with possible environmental impact**	FSM
Pipe	10.2.3.1	Inspection	*At same frequency that HPR facility assessment is required**	ES&H
Fittings	10.2.3.1	Inspection	*At same frequency that HPR facility assessment is required**	ES&H
Hangers	10.2.3.2	Inspection	*At same frequency that HPR facility assessment is required**	ES&H
Supports	10.2.3.2	Inspection	*At same frequency that HPR facility assessment is required**	ES&H
Nozzles	10.2.4	Inspection	Annually (part of annual test)	FSM
Nozzles	10.3.3	Test	Annually	FSM
Strainers	10.2.6	Inspection	Domestic water source – every 3 yrs. following the full flow trip test Raw water source - annually, and after each operation of the system	FSM
Strainers	10.2.6.1	Test	Annually	FSM
Strainers	10.2.6.3 and 10.2.6.4	Maintenance	Domestic water source – every 3 yrs. following the full flow trip test	FSM

DRAFT

ITEM	CODE REFERENCE	ACTIVITY	FREQUENCY	RESPONSIBILITY
			Raw water source - annually, and after each operation of the system	
Manual Release	10.3.5	Test	Annually	FSM
Water Spray System	10.3, Chapter 13	Test	Annually	FSM
Water Spray System	10.2.1,4, Chapter 13	Maintenance	Annually	FSM
VALVES AND FD CONNECTIONS NFPA 25				
Control Valves, locked or supervised	Table 13.1 13.3.2.1.1	Inspection	FFD – Monthly, Post Indicator Valves FFD – Quarterly, Outside Screw & Yoke FSM – Annually, Outside Screw & Yoke	PIVs – FFD OS&Y's – FFD and FSM during testing.
Post Indicator Valves, position	Table 13.1 13.3.3	Test	FFD - Monthly inspection only FESS/Ops - Annually (during annual ICW main flushing)	FFD, FESS/Ops
Post Indicator Valves, position	Table 13.1 13.3.2	Inspection	FFD - Monthly inspection only FESS/Ops - Annually (during annual ICW main flushing)	FFD, FESS/Ops
Valve Box (Buffalo Box)	AWWA M14 & NFPA 25 13.3.3.1	Test	Annually (DWS & ICW)	FESS Opss
Control Valves, operation	Table 13.1	Test	Annually	FSM
Control Valves, supervisory	Table 13.1 13.3.3.5	Test	Annually (These valves are locked in the open position)	FSM
Control Valves	Table 13.1	Maintenance	*As needed* *Based on inspection and test**	FSM FESS/Operations
Alarm Valves			See Check Valves	All alarm valves on site have been converted to simple check valves - no alarm functions
Check Valves, interior	Table 13.1	Inspection	*As needed* *Based on inspections and tests of systems**	FSM
Preaction/Deluge/Dry Pipe Valves, exterior	Table 13.1 13.4.3.1.6 13.4.4.1.4	Inspection	FSM - Annually (as part of the test) BM – Quarterly	FSM, Building Manager
Preaction/Deluge Valves interior	13.4.3.1.7.1	Inspection	*As needed**	FSM
Dry Pipe Valves, interior	Table 13.1	Inspection	Annually	FSM
Preaction/Deluge/Dry Pipe Valves priming water	Table 13.1	Test	Annually	FSM

DRAFT

ITEM	CODE REFERENCE	ACTIVITY	FREQUENCY	RESPONSIBILITY
Preaction/Deluge/Dry Pipe Valves low air pressure alarm	Table 13.1	Test	Annually	FSM
Dry Pipe Valve Compressor Meters	No code reference	Inspection	Monthly These meters monitor compressor cycling to identify if systems have air leak problems	BM
Preaction/Deluge, full flow	Table 13.1 13.4.3.2.2	Test	*Water Spray (Deluge)* *Annual (use test valve to isolate system where available if raw water source or high value or if access to system drains is not available due to accelerator operation)* *Full flow - minimum of 3 years**	FSM
Dry Pipe Valves/Quick Opening Devices, test	Table 13.1 13.4.4.2.4	Test	Quarterly	FSM
Dry Pipe Valves/Quick Opening Devices, trip test	Table 13.1 13.4.4.2.2	Test	Annually	FSM
Dry Pipe Valves/Quick Opening Devices, full flow trip test	Table 13.1 13.4.4.2.2.2	Test	*Every three years**	FSM
Dry Pipe Systems, air leak test	13.4.4.2.9	Test	Every three years	In-Lieu of testing, counter boxes have been installed and tested annually by FSM. In addition, air compressors are monitored by FIRUS
System Strainers, Filters, Orifices – Preaction/Deluge/Dry Pile Valves	Table 13.1 13.4.3.1.8 13.4.1.6	Inspection	*Every three years after the Full Flow Trip Test**	FSM
Pressure Reducing and Relief Valves, sprinkler/standpipe (Sprinkler Relief Valves)	Table 13.1 13.5.1.1	Inspection	*Annually, or when gage inspection indicates excessive pressure**	FSM
Pressure Relief Valves, Fire Pump	13.5.6.1.2 13.5.6.1.1 13.5.6.2.1	Inspection	Weekly	FESS/Operations

DRAFT

ITEM	CODE REFERENCE	ACTIVITY	FREQUENCY	RESPONSIBILITY
Pressure Relief Valves, sprinkler systems	13.5.1.3	Test	Annually	FSM
Fire Department Connections	13.7.1	Inspection	FFD Monthly FSM Annually	FFD
Main Drain	Table 13.1 13.3.3.4	Test	*Annually and after system disablement (including disablement of supply mains)**	FSM
WATER MIST SYSTEMS NFPA 750				
Water Tank, Supervised	12.2.2	Inspection	*Annually**	FSM
Water Tank	12.2.2	Maintenance	Annually, including drain and refill	FSM
Air Pressure Cylinders, Supervised	12.2.2	Inspection	*Annually**	FSM
System Operating Components, Supervised	12.2.2	Inspection	Annually	FSM
Batteries, Control Panel, Interface Equipment	12.2.2	Inspection	Annually	FSM
Batteries	12.2.2	Test	Annually	FSM
Strainers and Filters	13.4.3.1.8	Inspection	Annually	FSM
Strainers and Filters	12.2.2	Maintenance	After system operation	FSM
Control Equipment, Supervised	NFPA 72	Inspection	Annually	FSM
Control Equipment, Supervised	NFPA 72	Test	Annually	FSM
Piping, Fittings, Nozzles, Hangers, tubing	12.2.2	Inspection	*At same frequency that HPR facility assessment is required. Also after operation**	ES&H FSM after operation
Pressure Relief Valve	13.5.6.2.2	Test	Annually	FSM
Water Level Switch	12.2.2	Test	Annually	FSM
Release Mechanisms	12.2.2	Test	Annually	FSM

DRAFT

ITEM	CODE REFERENCE	ACTIVITY	FREQUENCY	RESPONSIBILITY
Control Unit/Program Logic Control	12.2.2	Test	Annually	FSM
Water	12.2.2	Test	*Annually. This is an analysis of the water content*.*	FSM
System, Flow Test	10.1	Test	Annually.	FSM
System, Flushing	12.2.2	Maintenance	Annually	FSM
Pressure Cylinders	12.2.2	Test	Before recharge if >5 yrs. From last test - 12 yrs. max.	FSM (Sub-Contracted)
Automatic Nozzles	12.2.2	Test	20 yrs.	FSM (Sub-Contracted)
Backflow Prevention Device	Table 12.2.2	Test	*Annually – Illinois Plumbing Code, Cross Connection Control Device Inspector*	FSM/FESS-Operations

DRAFT

RECOMENDED NFPA TESTING FREQUENCIES MATRIX - FIRE ALARM SYSTEMS

ITEM	CODE REFERENCE	ACTIVITY	FREQUENCY	RESPONSIBILITY
CONTROL EQUIPMENT (Monitored) NFPA 72				
Function	Table 14.4.2.2	Test	Annually	FSM
Fuses	Table 14.3.1 Table 14.4.2.2	Insp. & Test	Annually	FSM
Interface Equipment	Table 14.3.1 Table 14.4.3.2	Insp. & Test	Annually	FSM
Lamps & LED's	Table 14.3.1 Table 14.4.3.2	Insp. & Test	Annually	FSM
Primary Power Supply	Table 14.3.1 Table 14.4.3.2	Insp. & Test	Annually	FSM
Transponders	7-3.2, Table 7-3.2	Test	Annually	FSM
ENGINE DRIVEN GENERATORS NFPA 110				
Appurtenant components (batteries, fuel Level, etc.)	8.4.1	Inspection	Weekly	BM
Emergency standby power (Diesel Generator)	8.4.2	Test	Monthly Exercise with Load	FESS/Operations
BATTERIES - FIRE ALARM SYSTEM NFPA 72				
Battery, Sealed Lead-Acid	14.3.1	Inspection	*Semiannual for Dorados. Annual for all others (they are remotely monitored)**	FSM
Battery, Sealed Lead-Acid	14.4.3.2	Replacement	*Every 4 years**	FSM
Charger	14.4.3.2	Test	*Annually**	FSM
Discharge, Sealed Lead-Acid	14.4.3.2	Test, 30 min.	*Annually**	FSM
Load Voltage, Sealed Lead-Acid	14.4.3.2	Test	*Annually**	FSM
TRANSIENT SUPPRESSORS NFPA 72				
	14.3.1	Inspection	*Annually. Supervised for operation**	FSM
CONTROL PANEL TROUBLE SIGNALS NFPA 72				
LEDs Indicating lights	14.3.1	Inspection	*Annually. Supervised for operation**	FSM
LEDs Indicating lights LCD Screens	14.4.3.2	Test	Annually	FSM

DRAFT

ITEM	CODE REFERENCE	ACTIVITY	FREQUENCY	RESPONSIBILITY
EMERGENCY VOICE/ALARM COMMUNICATIONS EQUIPMENT NFPA 72				
Speakers	14.3.1	Inspection	*Annually*	FSM/ES&H
Speakers/Amplifiers	14.4.2.2	Test	Annually	FSM
REMOTE ANNUNCIATORS NFPA 72				
Keypad Annunciator	14.3.1	Inspection	*Annually**	FSM
Keypad/CPU Annunciator	14.4.2.2	Test	Annually	FSM
INITIATING DEVICES NFPA 72				
Air Sampling	14.3.1	Inspection	*Annually. Systems are remotely supervised**	FSM
Air Sampling	14.4.2.2	Test	Annually	FSM
Duct Detectors	14.3.1	Inspection	*Annually* *Systems are remotely supervised**	FSM
Duct Detectors	14.4.2.2	Test	Annually	FSM
Electromechanical Releasing Devices	14.3.1	Inspection	*Annually**	FSM
Electromechanical Releasing Devices	14.4.2.2	Test	Annually	FSM
Fire Suppression System Switches	14.3.1	Inspection	*Annually* *Systems are remotely supervised**	FSM
Fire Suppression System Switches	14.4.2.2	Test	Annually	FSM
Fire Alarm Boxes	14.3.1	Inspection	*Annually**	FSM
Fire Alarm Boxes	14.4.2.2	Test	Annually	FSM
Heat Detectors	14.3.1	Inspection	*Annually* *Systems are remotely supervised**	FSM
Heat Detectors	14.4.2.2	Test	Annually	FSM
Radiant Energy Fire Detectors	14.3.1	Inspection	*Annually* *Currently None on site**	FSM
Radiant Energy Fire Detectors	14.4.3.2	Test	*Annually* *Currently None on site**	FSM
Smoke Detectors	14.3.1	Inspection	*Annually* *Systems are remotely supervised**	FSM
Smoke Detectors, Functional	14.4.3.2	Test	Annually	FSM

DRAFT

ITEM	CODE REFERENCE	ACTIVITY	FREQUENCY	RESPONSIBILITY
Smoke Detectors, Sensitivity	14.4.3.2	Test	*Annually* *Done only on systems capable of giving a Sensitivity Report, clean-environments, such as residential and offices, every 3rd year clean, all other areas clean annually. Perform functional test annually*	FSM
Fire-Gas and Other Detectors	14.4.3.2	Test	Annually	Reference FESHM 6013
Supervisory Signal Devices	14.3.1	Inspection	*Annually* *Systems are remotely supervised**	FSM
Supervisory Signal Devices, except valve tamper	14.4.3.2	Test	Annually Systems are remotely supervised.	FSM
Supervisory Signal Devices, valve tamper	NFPA 25, 13.3.5.1	Test	*Annually* *Systems are remotely supervised and valves are locked**	FSM
Waterflow Devices	14.3.1	Inspection	*Annually, during test**	FSM
Waterflow Devices	14.4.3.2	Test	FFD Quarterly, FSM Annually Maintain current frequency based on water quality and past history of failures during testing	FFD and FSM
INTERFACE EQUIPMENT NFPA 72				
Elevator recall, HVAC Shut-down, etc.	14.3.1	Inspection	*Annually**	FSM
Elevator recall, HVAC Shut-down, etc.	14.4.3.2	Test	Annually	FSM
SPECIAL HAZARD EQUIPMENT NFPA 72				
Abort switch, release solenoid, cross-zone circuit, etc.	14.4.2.2	Test	Annually	FSM
ALARM NOTIFICATION APPLIANCES – Supervised NFPA 72				
Audible & Visual Devices	14.3.1	Inspection	*Annually**	FSM
Audible & Visual Devices	14.4.2.2	Test	*Annually**	FSM
SUPERVISING STATION FIRE ALARM SYSTEM NFPA 72				
Transmitter	14.3.1	Inspection	*Annually**	FSM
Transmitter	14.4.2.2	Test	Annually	FSM

DRAFT

ITEM	CODE REFERENCE	ACTIVITY	FREQUENCY	RESPONSIBILITY
Receivers	14.3.1	Inspection	Semiannually	COMM
Receivers	14.4.2.2	Test	Monthly Reference FESHM 6013	FSM/COMM
SPECIAL PROCEDURES NFPA 72				
Alarm Verification	14.3.1	Inspection	*Annually.* *Systems are remotely supervised**	FSM
Multiplex Systems	14.4.2.2	Test	Annually	FSM

DRAFT

RECOMMENDED NFPA TESTING FREQUENCIES MATRIX – SPECIAL FIRE SUPPRESSION SYSTEMS

ITEM	CODE REFERENCE	ACTIVITY	FREQUENCY	RESPONSIBILITY
CARBON DIOXIDE SYSTEMS NFPA 12				
System, Condition	4.8.1	Inspection	Monthly	FFD
System, Operation	4.8.1	Insp. & Test	Annually	FSM
Hoses	4.8.2.2	Test	Replace hose every 5 Years.	FSM
High Pressure Cylinders	4.8.3.5.1	Weighing	Semiannually (There are no gages on the CO_2 cylinders)	FSM
HALON 1301 SYSTEMS NFPA 12A				
System	6.1	Inspection	*Monthly**	FFD
System	6.1	Test	*Annually**	FSM
Cylinders	6.2.1	Inspection	*Annually* *Maintain current procedure to inspect at annual test or after a discharge**	FSM – Sub-Contracted if Discharge
Cylinders	6.2.1	Test	*When Discharged**	FSM (Sub-Contracted)
Hose	6.3.1	Test	*Replace hose every 5 Years**	FSM
Protected Enclosure	6.4.1	Inspection	*Same frequency that HPR facility assessment is required**	ES&H
Protected Enclosure	6.4.1	Integrity Test	As indicated	FESS (Sub-Contracted)
DRY CHEMICAL SYSTEMS NFPA 17				
System	11.2.1	Inspection	Monthly	FFD
Protected Hazard	11.3.1.1	Inspection	*At same frequency that HPR facility assessment is required**	ES&H
System Components	11.3.1	Maintenance	*Annually**	FSM
Dry Chemical	11.3.1.2	Inspection	Every 6 years	FSM
System, including Releasing Devices	11.3.1	Test	Annually	FSM
Fixed-temperature Fusible metal alloy temperature sensors	11.3.2.1	Replacement	Annually	FSM
Other fixed-temperature sensors	11.3.3	Maintenance	Annually	FSM
Cylinders	11.5.1	Hydro Test	12 years	FSM (Sub-Contracted)
Hose	11.5.2	Hydro Test	Replace hose every 12 Years	FSM
WET CHEMICAL SYSTEMS NFPA 17A				
System	7.2.1	Inspection	Monthly	FFD
Protected Hazard	7.2.2	Inspection	Semiannually	FSM (Sub-Contracted)

DRAFT

ITEM	CODE REFERENCE	ACTIVITY	FREQUENCY	RESPONSIBILITY
System Components	7.2.2	Maintenance	Semiannually	FSM (Sub-Contracted
System, including Releasing Devices	7.2.2	Test	Semiannually	FSM (Sub-Contracted)
Fixed-temperature Fusible metal alloy temperature sensors	7.3.3.2	Replacement	*Annually**	FSM (Sub-Contracted)
Other fixed-temperature sensors	7.3.4	Maintenance	*Annually**	FSM (Sub-Contracted)
Cylinders	7.5.1	Hydro Test	12 years	FSM (Sub-Contracted)
Hose	7.5.1	Hydro Test	Replace hose every 12 years	FSM
CLEAN AGENT SYSTEMS NFPA 2001				
System	7.1.1	Inspection	*Monthly**	FFD
System	7.1.1	Insp. & Test	Annually	FSM
Agent Quantity	7.1.3	Inspection	*Annually**	FSM
Refillable Container Pressure	7.1.4	Inspection	Semiannually when accessible.	FSM
Cylinders	7.2.2	Inspection	*Annually* *Maintain current procedure to inspect at* *annual test or after a discharge**	FSM – (Sub-Contracted if Discharge)
Cylinders	7.2.2	Test	*When discharged if over 5 years from last test**	FSM (Sub-Contracted)
Hose	7.3.1	Inspection	Annually	FSM
Hose	7.3.2.1	Test	Replace hose every 5 Years	FSM
Protected Enclosure	7.4.1	Inspection	*At same frequency that HPR facility assessment is required**	ES&H
Protected Enclosure	7.4.1	Integrity Test	As indicated	FESS (Sub-Contracted)
EMERGENCY LIGHTING/EXIT SIGNAGE NFPA 101				
Emergency Lighting	7.8 & 7.9	Testing	Reference FESHM 6011	BM
Exit Lighting	7.8 & 7.9	Testing	Reference FESHM 6011	BM
FIRE BARRIER ASSEMBLIES NFPA 80, NFPA 204, NFPA 221				
Penetrations	NFPA 221, 4.4.4	Inspection	*Same frequency that HPR facility assessment is required**	ES&H
Smoke Partitions	NFPA 221, 4.4.4	Inspection	In accordance with FESS/Engineering Project No. 13-1-48	Not applicable
Fire/Smoke Vents	NFPA 204, 12.3.2.2	Inspection	Annually	FESS
Doors	NFPA 80, 5.2.1	Inspection	Annually, Reference FESHM 6012	BM
Fire/Smoke Dampers	NFPA 80, 19.4.1.1	Inspection	Annually per FESS/Engineering Project No. 13-1-48	FSM

DRAFT

7.0 TECHINCAL APPENDIX B: OVERVIEW OF SITE-SPECIFIC PROGRAM

Fire Protection Program Site Specific Summary

Table of Contents

1.0 Overview

1.1 Site Description
1.2 Water Supplies
1.3 Alarm and Communication
1.4 Environmental Management

2.0 Fire Protection Program

2.1 Fire Protection Engineering
2.2 Fire Protection Inspection, Maintenance, & Testing

3.0 Fire Department/Emergency Response

3.1 Fire Department/Emergency Response Procedures

DRAFT

1.0 Overview

The Fermilab Environment, Safety, and Health Manual (FESHM 6000 series) outlines the requirements of the Fire Protection Program. The Fire Hazard Subcommittee (FHS) of the Fermilab ES&H Committee (FESHCom) is responsible for updating these chapters and providing guidance to the laboratory related to fire and life safety. The Fire Protection Program has been developed to provide a level of fire protection sufficient to minimize losses from fire and related hazards consistent with the best protected class of industrial risks and is in accordance with 10 CFR 851 Worker Safety and Health Program, Part 851.24 and Appendix A, Chapter III part 2 entitled Fire Protection.

1.1 Site Description

Fermi National Accelerator Laboratory (Fermilab) is owned by the Department of Energy and is operated and managed by Fermi Research Alliance (FRA). FRA is a limited liability company and is a joint partnership of the University of Chicago and the Universities Research Association. Fermilab is located on approximately 6,800 acres of land owned by the Department of Energy from the State of Illinois. There are over 350 buildings, comprising approximately 2.6 million gross square feet.

1.2 Water Supply

Fermilab's main site fire protection water supply is from the Industrial Cooling Water (ICW) system, with approximately 24 miles of underground piping. The ICW system is non-potable and comes from an open pond reservoir with approximately 36-million-gallon capacity and can be supplemented from a pumping station located on the Fox River in Kane County. The Fermilab Village fire protection water supply is from City of Warrenville and is a potable water source.

1.3 Alarm and Communications

Fermilab uses a custom-developed Facility Information Reporting Utility System (FIRUS), which is on a secure network and monitors fire, security, and utility sensors throughout the laboratory. The Accelerator Division (AD) maintains, tests, and ensures the reliability of FIRUS. In an alarm or trouble event, FIRUS signals Fermilab's Communication Center (Comm Center) which is staffed with operators 24/7. The Comm Center dispatches the appropriate emergency response personnel. Individual fire alarm systems monitor all manual pull stations, smoke detectors, heat detectors, sprinkler water flow alarm detectors, valve supervisory switches, and other fixed fire suppression systems. All alarms are transmitted to the Comm Center.

1.4 Environmental Management

The Facilities Engineering Services Section, Roads and Grounds Department manages the prescribed burn of Fermilab's prairies. This involves pre-planning and oversight from the Fermilab's Fire Department, is covered under a permit with the Illinois Environmental Protection

DRAFT

Agency, and incorporates guidelines from NFPA 1144, Standard for Protection of Life and Property from Wildfire.

2.0 Fire Protection Program

Line management is responsible for facility and employee safety, including fire safety, under the Directorate. There is a cross-organizational management approach to Fermilab's fire protection program. Facilities Engineering Services Section (FESS) executes the modifications, construction, and testing, maintenance, and repairs of the fire safety systems as delineated in Technical Appendix A of FESHM Chapter 6010. Fermilab's Fire Department performs quarterly sprinkler water flows tests, periodic building inspections, and is involved in the approval process of Hazard Maps, as delineated in FESHM Chapter 6016. Environment, Safety, Health, and Quality (ES&H) Fire Protection Engineer (FP-AHJ) performs Highly Protected Risk (HPR) inspections as delineated in FESHM Chapter 6015. The ES&H FP-AHJ is also the site Authority Having Jurisdiction (AHJ) and reviews/approves experiment as well as facility fire safety designs.

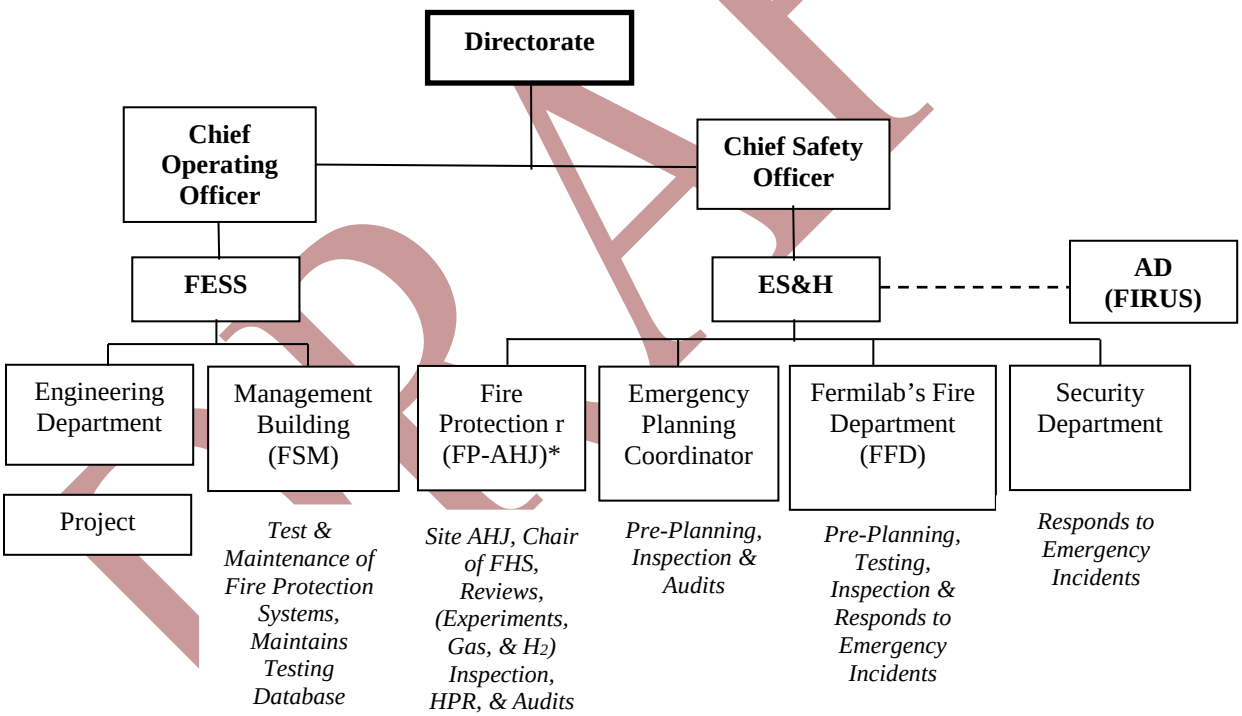

**Denotes: ES&H-FP-AHJ is the site Authority Having Jurisdiction*

2.1 Fire Protection Engineering

Fermilab ES&H Section has a qualified individual who has Graduate Certificate in Fire & Emergency Services, Certified Fire Protection Specialist and NICET certified in Water-based Fire Suppression Layout (Level IV), Fire Alarm Systems (Level III), and Special Hazards Suppression. Also, professional member of the Society of Fire Protection Engineers (SFPE). The Facilities Management fire system maintenance technicians are certified by NICET for inspection, testing, and maintenance and or fire alarm system ranging from Level II to Level III. Fermilab Fire Department qualifications can be found in the Baseline Needs Assessment.

In its designs, FESS Engineering and/or Project uses both the International Building Code and NFPA 101, Life Safety Code. In addition, Fermilab follows NFPA 30 in lieu of the quantities and limitations set forth by IBC and IFC. For subterranean spaces, Fermilab follows NFPA 520 and DOE 1066, 2016 Edition. For Conceptual Design Reports (CDR) involving new beam-line enclosures and/or new buildings, the fire safety criteria is established and reviewed with ES&H, reference Table 1.

DRAFT

Team	Governance	PROJECT STAGE			Operation
		Concept	Design	Construction	
User/Experimenter requirements	DP-18 & DP-36, FESHM 6011, 6012, 6013, 6020.3, 6040.3 & 5000 series, Engineering Manual	Close collaboration to understand operational goals; work with FESS to develop project plan and conceptual design report	The user liaison communicates any operational implications to FESS	Collaboration to verify operation readiness	Safety Assessment Document (SAD) Accelerator – Readiness Review, inspection & testing
Facilities Engineering Services Section (FESS) – Engineering Department or Project	FESHM 1070, 2010, 8012, 8023, 8050 & 8070, Engineering Manual, & FESS Engineering Design Guides,	Understand & develop design requirements; develop conceptual design report including plans and fire strategy approach	Review plans, for compliance with fire strategy criteria. If fire protection systems are designed in-house, then will be reviewed by fire protection consultant.	Site inspections and system commissioning	
FESS-Engineering's A/E Firm or Project A/E Firm	FESS-Engineering's A/E Handbook& FESS Engineering Design Guides	Assists in developing the fire strategy	Incorporate conceptual design report into bid design documents	Responds to requests for information and/or revisions to design document	
FESS-Facility Management (Fire Systems Maintenance)	FESHM 6010		Review plans for maintainable fire protection systems	Witnessing system commissioning, provides training to FFD on building FP systems	Inspection, testing, & maintenance of fire protection systems
(FESS-Engineering) Construction Management Office (CMO)	FESHM 2020, 2060, 6014, 6020.2, 6040.1, 7010, 7030, 7040, & 7050, Engineering's Procedure Manual			Verifies enforcement of the subcontractor's safety plan during construction	
Environment Safety Health &Quality Section (ES&H)-Fire Protection Engineer	FESHM 2050, 6010, & 6015	Assists and Agree on fire strategy (Sign-Off Authority)	Review plans, communicates with design team (Sign-Off Authority)	May be involved in witnessing system commissioning	Highly Protected Risk Inspection program, Experiment Reviews & Approvals
(ES&H) - Fermilab's Fire Department	Emergency Management Procedure Manual, FESHM 6010, 6016	Agree and participants in the development of the fire strategy	Review plans, communicates with design team	Participant in walkthroughs and provided overview/training of the fire protection systems	User/Experimenter develops Haz Map and reviewed/input from Fire Department. Periodic walkthrough / inspections

0 Table 1 – Fire Safety Process Qualitative Design Review

DRAFT

2.2 Fire Protection Maintenance

All fire detection and suppression systems are tested, inspected, and maintained by FESS Fire Systems Maintenance (FSM) group, a group within the FESS Management, Building & Building Support Department. FESS has the responsibility to test, repair, and maintain the various fire protection/detection systems and is summarized in Figures 1 and 2 below.

Fire Sprinkler Systems		**Special Suppression Systems**	
Wet Type	116	CO_2 High Pressure	3
Dry Type	12	Dry Chemical	3
Pre-action Type	8	FM-200	4
Anti-Freeze Type	1	Halon	20
Fixed Water (Deluge)	2	Water Mist	8
Standpipe	2	Wet Chemical	3
	Total = 141		**Total = 41**

Figure No. 1

Fire Alarm System Components	
Fire Alarm Control Panels	435
Air Sampling Smoke Detection	62
Spot Type Smoke Detectors	2,684
Spot Type Heat Detectors	864
Manual Pull Stations	1,211
Sprinkler Control Valves	453
Line Type Heat Detection	16

Figure No. 2

3.0 Fire Department/Emergency Response

Fermilab's Fire Department is a member of the Mutual Aid Box Alarm System in Illinois, which provides assistance and has auto-aid agreements for both on site and off site with the City of Batavia and Warrenville Fire Departments. Fermilab's Fire Department also administers the Welding, Burning, Brazing Permit per FEHSM Chapter 6020.2, fall rescue, and is notified of entry into confined spaces, via the Confined Space Permits found in FESHM Chapter 5063.

3.1 Fire Department/Emergency Response Policies and Procedures

ES&H has the set of operational policies and procedures that are maintained by the Fire Department and Emergency Planning Coordinator. ES&H inspects and maintains the 1,350 portable fire extinguishers, inspects the fire rated assemblies, and updates the Baseline Needs Assessment.

DRAFT

8.0 TECHINCAL APPENDIX C: FIRE PROTECTION DESIGN GUIDES

Table of Contents

I. Introduction 33

A. Definitions 33
B. Applicable Codes & Standards 34

II. Experiments and Accelerator Operations 36

A. Reference Material 36
B. Operational Readiness Clearance (ORC) 36
C. Flammable Gas: 36
D. Foam boards: 36
E. Wood 37
F. Storage of wood or plastic pallets or packing material 37
G. Plastics 37
H. Cable Jackets 38
- Plenum (CMP) Rated Cable 38
- Riser (CMR) Rated Cable 38
- General Purpose (CM, CMG, CMx) Cable 38
- Other Cable Ratings: 38

I. Current Protection for both AC and DC Powered Installations (Fire/Smoke Hazard) 39
J. Rack Protection 39
K. Summary 39

III. Facility Safety 40

A. Design Considerations 40
B. Design Criteria and Evaluation 40
C. Installation, Fabrication, and Construction 44

IV. Fire Alarm 45

A. Design/Construction Submittals 45
B. Design Criteria and Evaluation 45
C. Installation, Fabrication, and Construction 47

V. Automatic Sprinkler Systems 48

A. Design/Construction Submittals 48
B. Design Criteria and Evaluation 48

DRAFT

C. Products, Materials, and Equipment 49
D. Installation, Fabrication, and Construction 50

VI. Special – Fixed Fire Extinguishing Systems 51

A. Design/Construction Submittals 51
B. Design Criteria and Evaluation 51
C. Products, Materials, and Equipment 51
D. Installation, Fabrication, and Construction 51

VII. Fire Extinguisher 52

A. Design/Construction Documents 52
B. Design Criteria and Evaluation 52
C. Products, Materials, and Equipment 52
D. Installation, Fabrication, and Construction 52

Appendix A – EMERGENCY POWER OFF 53

Appendix B - Water Supply 62

Figure 1 - Combination Heat/Smoke Vent 41
Figure 2 - Elevator & Ambulance Cot 42
Figure 3 - Fire Alarm Power Configuration 46
Figure 5 - Typical Wet Type Sprinkler Riser 49

Table 1 - Summary of Occupancy Type 43
Table 2 - Summary of Means of Egress 43

DRAFT

I. Introduction

The objective of US Department of Energy (DOE) is to provide a level of safety protection consistent with "Highly Protected Risk" (HPR) class of Industrial risks. This objective requires significant facilities and processes to be protected by a robust fire protection physical feature. Such measures often promote fire protection mitigation to a greater degree than building and fire codes. Additionally, designing a new facility or building, considers all features, processes or the experiment and assembly of the experiment, that affect fire safety. To achieve an HPR, the projects scope and specifications must include high design and equipment quality standards; appropriate statutory project design and construction that account for program interruptions and potential maximum fire loss. Considerations should include:

- Preliminary hazard assessment (PHAR)and formal hazard identification and mitigation studies;
- Major hazard facility assessment includes access/egress facility is considered a major hazardous facility;
- Program Interruption, fire loss, and risk assessment incorporating fire study;
- Project safety management plan

To that end, the Fire Protection Design Guides are intended for design professionals to facilitate design of experiments and facilities fire safety systems. The Fire Protection Design Guides are considered supplementary to the Fermilab ES&H Manual (FESHM) and Work Smart Set. As such, the design professional should consult first the FESHM and Work Smart Set for safety considerations.

A. Definitions

- International Code Council (ICC) – recognized publisher of building and fire codes.
- Fermilab Fire Department (FFD) – Individuals of an organization trained and tasked with emergency care, preventing, and extinguishing fires, and other emergency responses, such as oxygen depletion hazard (ODH).
- Fire Hazard Safety Subcommittee (FHS) – Subcommittee of the Fermilab ES&H Committee is delegated the Alternate Authority Having Jurisdiction (AHJ) in absence of the primary AHJ Site Fire Protection Engineer approved by Fermi Site Office (FSO). The FHS is responsible for fire safety, life safety aspects of facilities, processes and experiments, and flammable and compressed gas systems.
- Fire Protection AHJ (FP-AHJ) – Is delegated as the primary Authority Having Jurisdiction (AHJ) and approved by FSO. The FP-AHJ shall be highly trained and educated professional responsible for overseeing the overall implementation and development of the Fermilab fire protection program.
- Fire Systems Maintenance (FSM) Technician – Individuals trained in the inspection, testing, and minor maintenance of fire protection systems throughout the Laboratory (including Water Based Systems, Fire Alarm Systems, and Special Hazards Systems).
- FIRUS - Facility Incident Reporting and Utility System - Lab-wide system that monitors building fire alarm systems and transmits alarms to the Communications Center in Wilson Hall.

DRAFT

- Highly Protected Risk (HPR) - A facility that is characterized by a level of fire protection of the best protected class of industrial risks.
- Landlord - The Division/Section (D/S) responsible for the facility or space where work is planned or occurring.
- NFPA – National Fire Protection Association – Organization dedicated to fire safety through creating consensus standards and codes.
- ORC & TSW – Operational Readiness Clearance (ORC) and Technical Scope of Work (TSW).

B. Applicable Codes & Standards

- 10 CFR 851 Worker Safety and Health Program
- 29 CFR 1910.164 and 1910.165 Other Fire Protective Systems
- 29 CFR 1926.24 Fire Protection and Prevention, 1926.34 Means of Egress
- US Department of Energy Order 420.2C, Safety of Accelerator Facilities
- US Department of Energy Standard 1066, Fire Protection, 2016 Edition
- International Building Code (IBC), 2018
- International Fire Code (IFC), 2018 (*Except for quantities and limitations for Flammable/Combustible liquids*)
- American National Standard Institute
    - ANSI Z359.1, Safety Requirements for Personal Fall Arrest Systems, Subsystems and Components
- Federal Emergency Management Agency
    - FEMA 453, Safe Rooms and Shelters Protecting People Against Terrorist Attacks
    - Publication P-431, Tornado Protection: Selecting Refuge Area in Buildings
- National Fire Protection Association (NFPA)
    - NFPA 1, Fire Code, 2018
    - NFPA 3, Standard for Commissioning of Fire Protection and Life Systems, 2018
    - NFPA 4, Standard Integrated Fire Protection & Life Safety Systems Testing, 2018
    - NFPA 13, Automatic Sprinkler Systems, 2019
    - NFPA 15, Fixed Water Spray Systems, 2017
    - NFPA 17A, Wet Chemical Extinguishing Systems, 2017
    - NFPA 25, Inspection and Testing of Fire Suppression Systems, 2017
    - NFPA 30, Flammable and Combustible Liquids Code, 2018
    - NFPA 70, National Electrical Code, 2017
    - NFPA 72, National Fire Alarm and Signaling Code, 2019
    - NFPA 75, Standard for the Fire Protection of Information Technology, 2017
    - NFPA 101, Life Safety Code, 2018
    - NFPA 520, Standard on Subterranean Spaces, 2015
    - NFPA 750, Water Mist Fire Protection Systems, 2019

DRAFT

- NFPA 318, Standard for the Protection of Semiconductor Fabrication Facilitates, 2018
- NFPA 801, Standard for Fire Protection for Facilities Handling Radioactive Materials, 2014
- NFPA 2001, Clean Agent Fire Extinguishing Systems, 2018
- NFPA 2010, Standard for Fixed Aerosol Fire Extinguishing Systems, 2015

DRAFT

II. Experiments and Accelerator Operations

The purpose of this document is to provide guidance on experiment installation in relation to fire, life safety, property protection, and program impact throughout Fermilab. Including leased space. The following must be considered for experiments and accelerator operations.

- The fire properties of materials (plastics, wire, foam board or foam) chemicals that are toxic, combustible or flammable and flammable gasses).
- Your experiment in relation to other experiments in the area.
- Your experiments total loss or damage on the programmatic impact to Fermilab's mission.
- How a fire and corrosive smoke in your experiment would affect adjacent experiments and or flammable gas use in the area.
- Position of equipment, how you route and the means you use to secure your cables affects being able to exit the area safely.
- Fire Department access and ability to suppress a fire or reach an injured person.
- If specifications and fire rating for the materials and cables and gasses used cannot be produced, then special mediation requirements and additional reviews and requirements and testing of the materials and maybe necessary.

A. Reference Material

The primary sources for these fundamental rules for the electrical safety of electrical installations at Fermilab are listed below:

- FESHM Chapter 6020.3: Storage and Use of Flammable Gases
- Electrical Design Standards for Electronics to be used in Experiment Apparatus at Fermilab Found in Technical Appendix of FESHM Chapter 2005
- Fermilab ES&H Manual Chapter 9000 series, Fermilab Electrical Safety Program

B. Operational Readiness Clearance (ORC)

The ORC review is a complete review of all aspects of an installation of which the fire/life safety are just a part. FESHM Chapter 2005 Operational Readiness Clearance provides guidance when an ORC review would be required. Advisory reviews can be requested for any setup, no matter how complex. If there are any questions about safe operation and what should be done to ensure its safe operation, both for the knowledgeable persons and for persons who are not directly responsible for a setup's design or operation ask. Remember: if in doubt, **please ask your Division Safety Officer.**

C. Flammable Gas:

When using a flammable gas or a non-flammable gas mixed with one component of the gas being flammable, the requester must submit to the chair of the Fire Safety Committee all paperwork required by FESHM Chapter 6020.3. This should be done as early as possible prior to starting the installation of the equipment.

D. Foam boards:

Foam boards are required to be fire rated (Class A) or covered/coated to remediate the hazard with an appropriate substance. Common situations include but are not limited to:

- Pink construction-type foam used to make boxes to hold experiments. The pink

DRAFT

construction-type foam is not fire-rated. By coded they are required to be covered by 5/8-inch gypsum board, which is generally not practical in experiment use.

- Herculite or foil may be approved to cover the material as a remediation based on the exposure to ignition sources.
- Display boards that are black are typically not fire rated.
- Display board that are white are typically fire-rated and are typically available in 4 x 8 ft. sheets. Using this board, however, requires the edges to be covered in metal tape or a silicone edge to be applied.
- Sheets of extra foam board should be removed from the experiment area and covered with Fire-Retardant (FR) Herculite or some other approved fire resistive material.
- Some foam is fire-resistant however there are normally restrictions on how it is installed and may require an exterior covering (encapsulation). It may have an UL rating of (HF-1, HF-2, HBF) and thin films (VTM-0, VTM-1, VTM-2). Or if used as a building material; Class A, B, or C.
- Always ask the Fermilab ORC Point of Contact if you are not sure on if or how a certain material can be used or contact the Fire Hazard Safety Subcommittee.

E. Wood

- Fire retardant wood is preferred.
- Un-treated wood can be painted with fire retardant paint or clear coat which is available in the Fermilab stockroom.
  - If painted offsite a label must be applied to the wood with the type of coating and a photo of the paint or coating material.

F. Storage of wood or plastic pallets or packing material

- Should be removed from the area as soon as possible.
- Material kept on site should be stored in a safe manner.
- Material may be required to be covered with FR Herculite to limit exposure.

G. Plastics

Increasing amounts of plastics are available with fire resistive properties. Plastics which are non-halogenated are preferred with an Underwriters Laboratories, Inc. (UL) with a classification of 94V-1, 94V-0 or Class A (if used as a building material). UL 94 is a plastic flammability standard released by Underwriters Laboratories of the USA. The standard classifies plastics according to how they burn in various orientations and thicknesses. From lowest (least flame-retardant) to highest (most flame-retardant), the classifications are:

- HB: slow burning on a horizontal specimen; burning rate < 76 mm/min for thickness < 3 mm.
- V2: burning stops within 30 seconds on a vertical specimen; drips of flaming particles are allowed.
- V1: burning stops within 30 seconds on a vertical specimen; drips of particles allowed as long as they are not inflamed.
- V0: burning stops within 10 seconds on a vertical specimen; drips of particles allowed as long as they are not inflamed.
- 5VB: burning stops within 60 seconds on a vertical specimen; no drips allowed;

DRAFT

plaque specimens may develop a hole.

H. Cable Jackets

In spaces with air movement, such as drifts or enclosures the preferred cable type is Plenum and in vertical installations, riser type. In all cases, the cable jackets shall comply with NFPA 70, National Electrical Code (NEC).

- **Plenum (CMP) Rated Cable**

  Plenum rated cables comply with NFPA-262 and UL-910 and meets the following requirements:
  - Are required to be used in spaces defined as air plenums such as raised flooring systems and air handling ducts.
  - Must self-extinguish and not reignite.
  - Produce less smoke than tradition PVC cables.

- **Riser (CMR) Rated Cable**

  Riser rated cables comply with UL-1666 and meets the following requirements:
  - Used in vertical installation, applications such as cable runs between floors through cable risers or in elevator shafts.
  - Cables must self-extinguish and must also prevent the flame from traveling up the gable in vertical burn test.

- **General Purpose (CM, CMG, CMx) Cable**

  Complies with UL-1581 testing and meets the following requirements: .
  - Will burn and partially self-extinguish.
  - Not for use between build floors.

- **Other Cable Ratings:**

  Low Smoke Zero Halogen (LSZH) Rated Cable typically used in high radiation areas where the fluoridated cable jackets can break down from beam or high radiation exposure. The characteristics of LSZH cables are:
  - LSZH rating provides low toxic or acidic smoke and fumes; however, burns longer and has the potential to “drip” which then can ignite other cables or combustible materials.
  - Low smoke means the cable does not produce heavy black soot and smoke common with PVC cables; it however, does not mean that it does not produce less toxic smoke than plenum or riser rated cabling.
  - Most of the currently available LSZH cables jackets will self-extinguish at a much greater time and burn distance than the traditional PVC cable jackets.
  - Currently, LSZH does not met UL-910 or UL-1666 for plenum or riser rating Cabling and therefore; normally does not tested to meet NEC (NFPA 70) mechanical requirements, e.g., LSZH cable jackets may be larger requiring special connectors.
  - Requires approval by the Electrical Safety and Fire Hazard Safety Subcommittees prior to use at Fermilab.

DRAFT

I. Current Protection for both AC and DC Powered Installations (Fire/Smoke Hazard**)**

All powered electrical equipment (non-commercial / non-UL listed) and conductors carrying that power to the equipment need to have protection as defined below:

- Protection can be in form of a current protection device (i.e. Fuse or Circuit Breaker)
- DC Power coming from a power supply without fuse protection must be current-limited. No part of the installation can get current in excess of the rated capacity.
- Limiting ability of the power supply should not be easily changed by inadvertent contact with the power supply's controls.
- Fuse required at or near the source of power if can be easily changed.
- Devices designed for current protection should provide current protection.
- Do not use or depend on low-current rated components (such as an undersized resistor) to provide disconnection or "open up" in the event of an over-current condition.

For additional guidance, see "Electrical Safety ORC Review Guidelines, FESM Chapter 2005, Appendix Material.

J. Rack Protection

Fermilab normally does not require rack protection with interlocks for installations. Customized rack protection is required unless it is commercial equipment located in a non-programmatic experiment in a sprinklered area; will not produce damage to adjoining experiment or equipment. Additional considerations are

- Underground installations,
-
- ODH spaces,
- interlocked areas with limited access by the Fire Department

Other methods of rack protection, such as groups of racks maybe controlled and shutdown utilizing air sampling smoke detection rather than individual racks. As always, ask the Fermilab ORC Point of Contact if you are not sure or contact the Fire Hazard Safety Subcommittee.

K. Summary

Materials cannot be substituted for the sake of convenience. The proper materials and gases must be used in the appropriate location as required by code and practice. What was approved in one experiment may not be the same in another. Always check with the Fermilab ORC Point of Contact if you are not sure or contact the Fire Hazard Safety Subcommittee**.**

DRAFT

III. Facility Safety

This section applies to the design of buildings and underground enclosures related to fire safety. No construction or alterations should reduce the level of fire protection or life safety provided by an existing condition.

A. Design Considerations

- Fermilab uses the International Building Code and NFPA 101 Life Safety Code. In addition, Fermilab follows NFPA 30 in lieu of the quantities and limitations set forth by IBC and IFC, reference also the Civil Utilities Design Guides.
- For Subterranean spaces reference DOE Standard 1066 for subterranean guidelines.
- Conceptual Design Reports (CDR) involving new beam-line enclosures and/or new buildings should be reviewed and the criteria established by project design team's life safety/fire protection licensed professional consultant. This Life Safety/Fire Protection Design Analysis should be submitted to the laboratory's site Authority Having Jurisdiction (AHJ). All major renovations should be reviewed by the Fire Hazard Safety Subcommittee and project design team's staff.
- If a proposed facility is handling radioactive materials and deemed necessary by the site AHJ and/or site Radiological Safety Officer (RSO), then a fire protection design/Fire Hazard Analysis should be included in the design documents, reference DOE Standard 1066 for further guidance.

B. Design Criteria and Evaluation

- Fire hydrants should be spaced 300 feet apart, per NFPA 1. Fire hydrants should be a minimum distance of 40 feet from a building.
- Oil filled transformers in excess of 500 gallons and up to 5,000 gallons must have a 25 feet separation from building or provide a 2-hour fire wall, in accordance with NFPA 70 and NFPA 850.
- New facilities located at the surface, exceeding 5,000 sq. ft. of floor area should be a minimum of Type IIB, construction type as defined by IBC. In addition, facilities exceeding 5,000 sq. ft. should be provided with automatic fire suppression system, reference DOE Standard 1066.
- Dry transformers should be used indoors. Dry transformers over 112.5kw require 1-hour fire rated room with self-closing door, in accordance with NFPA 70 Article 450.21.
- Electrical room(s) serving more than 800 amps shall have exit door that swings out with panic hardware or similar mechanism, in accordance with NFPA 70, Article 110.26.(c) (3).
- Delayed egress locks are allowed, in accordance with NFPA 101, in such cases as computer rooms, these should unlock within 30 seconds from a manual release mechanism. Security locks must unlock upon fire alarm activation to allow Fire Department personnel entrance.
- Labyrinths should be a minimum of 2-hour fire rated construction with 44 inches in width.

DRAFT

- Curtain Walls should comply with NFPA 286, Standard Methods of Fire Test for Evaluating Contribution of Wall and Ceiling Interior Finish to Room Fire Growth.
- Building roof material should be Class A, in accordance with NFPA 256, Standard Methods of Fire Test of Roof Coverings.
- Interior finish material should have a flame spread rating of 25 or less and a smoke development rating of 450 or less, reference FESHM Chapter 6040.2.
- Experimental Halls should be provided with a means of smoke ventilation at the roof. If combination heat smoke ventilation roof hatches are provided, fusible links should be rated 300ºF, so not to interfere with the operating temperature of the automatic sprinklers, see figure no. 1.

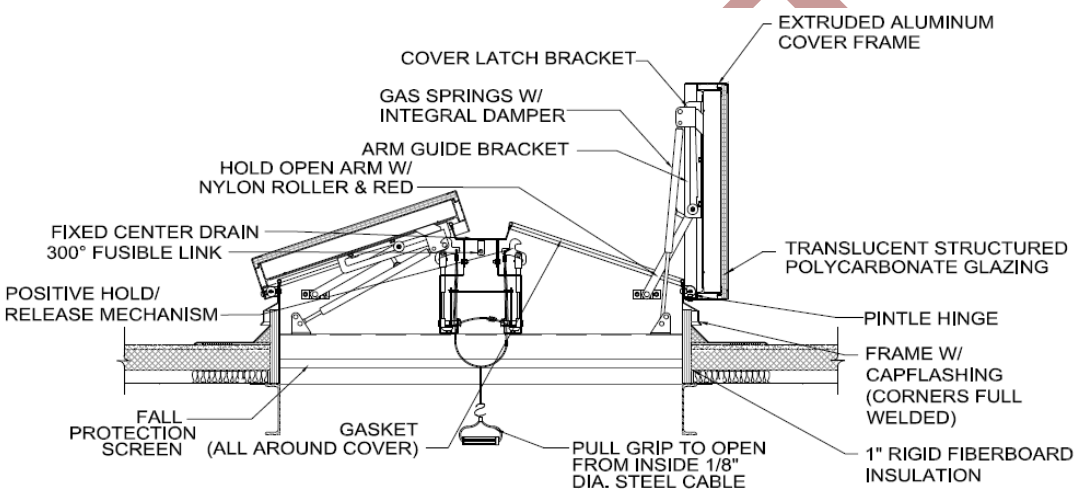

Figure 1 - Combination Heat/Smoke Vent

- Rooms or spaces that are classified as Assembly Occupancy should be posted with maximum occupant load.
- Elevator firefighter's operational controls and Elevator Key box should be keyed alike in accordance with ASME A17.1.
- Elevators for passengers serving 3 stories or less, reference Figure 2 below. For higher stories, must consult with Fermilab's Fire Department.

DRAFT

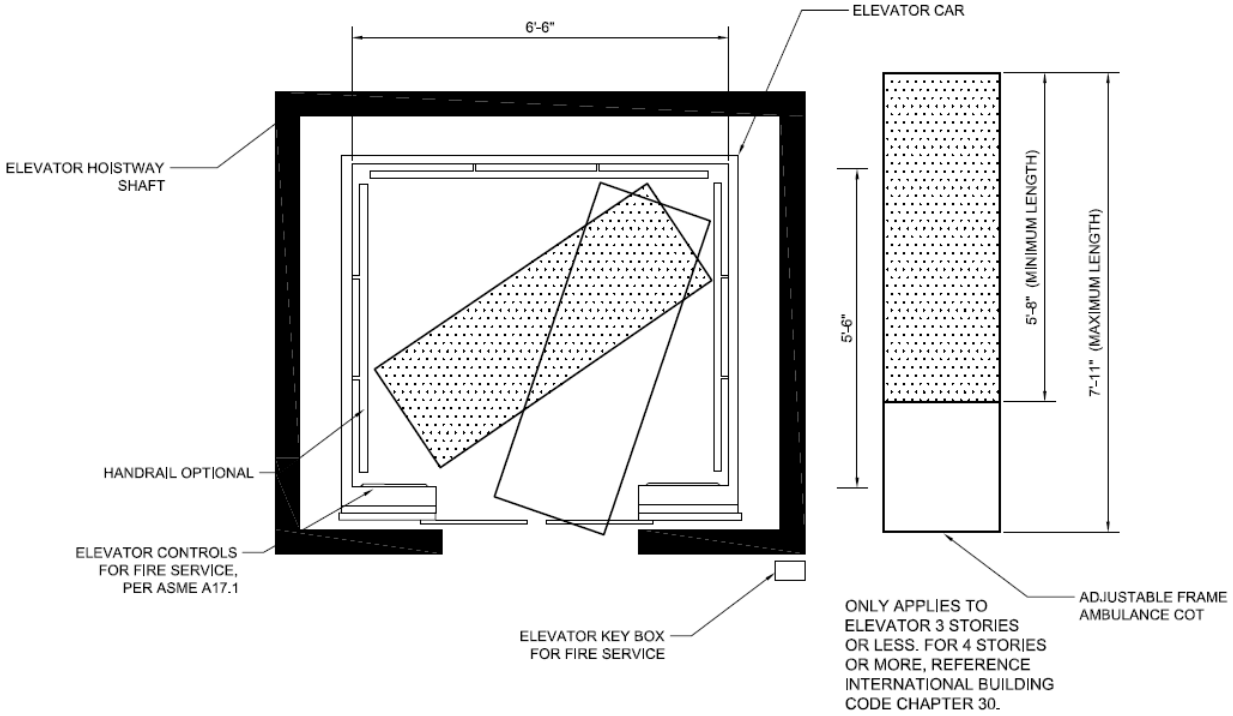

Figure 2 - Elevator & Ambulance Cot

- Typically building codes and NFPA standards do not require fire dampers in 1-hour fire rated walls, except for shaft enclosures and it is desirable to minimize the quantity and location of fire dampers, reference FESS Engineering Project No. 13-1-48.
- Where required during the design process, fall protection anchorage shall be designed to withstand 5,000 pounds in accordance with ANSI Z359 series.
- Where required during the design process, safe room and/or shelter shall be defined in accordance with the FEMA publications.
- All electronic locks, locking system and components should be UL listed.
- Commercial emergency power off systems should be provided in network/computer rooms over 500 sq. ft., in accordance with Memorandum dated July 2011, attached herein as Appendix A.
- The following tables are an overview of occupancy naming conventions and travel distance derived from NFPA 101 Table A7.5.6 & IBC Table 1016.1 and is summarized for guidance in determining the occupancy classification.

DRAFT

IBC, – Chapter 3	NFPA 101
Use Group B (Business)	Business
Use Group F-1 (Moderate Hazard Factory Industrial)	Industrial General
Use Group F-2 (Low Hazard Factory Industrial)	Industrial Special Purpose
High Hazard H1 – Pose a detonation hazard H2 – Pose a deflagration hazard H3 – Pose a combustible or physical hazard H4 – Pose a health hazard H5 – Production materials hazard	High Hazard (such as flammable liquids.)
Use Group U (Utility & Miscellaneous) 406.1.1	

Table 1 - Summary of Occupancy Type

- Overview of naming and classifications: (NFPA 101 Table A7.5.6 & IBC Table 1016.1)

IBC NFPA 101, 2015	MIN. WIDTH CORRIDORS	TRAVEL DISTANCE	COMMON TRAVEL	DEAD END
Business Use Groups (B) or Underground Spaces	44-inches	200-Ft / 300-Ft*	75Ft / 100Ft*	20Ft / 50Ft*
F-1 & S-1 (industrial General *& Storage Ordinary Hazard) – Except for Underground Spaces	36-inches If <50 occupants	200Ft/250Ft*	75Ft /100Ft*	20Ft / 50Ft*
F-2, S-2, & U (Industrial Special & Storage Low Hazard)	36-inches If <50 occupants	300FT/400FT *	75Ft /100Ft*	20Ft / 50Ft*
H-1 *(Must be Sprinklered)*	44-inches	75Ft *	25 Ft*	0
H-2 *(Must be Sprinklered)*	44-inches	100 Ft*	25 Ft*	0
H-3 *(Must be Sprinklered)*	44-inches	150Ft*	25 Ft*	0
H-4 *(Must be Sprinklered)*	44-inches	175Ft*	75 Ft *	0
H-5 *(Must be Sprinklered)*	44-inches	200Ft *	75 Ft*	0

** Fully supervised sprinklered building and/or smoke tight corridors*

Notes: 28-inches for access to and utilization of electrical, mechanical, or plumbing systems

Table 2 - Summary of Means of Egress

DRAFT

- At the discretion of the Fermilab's Fire Department, building door numbering may be required, reference FESHM Chapter 6020.4 - Exterior Door Numbering:
    - Prior to labeling door, review scheme with Fermilab's Fire Department.
    - Larger buildings and, under the direction of the Fermilab's Fire Department, exterior man doors will be numbered at the top right, starting at fire alarm control panel, then clockwise around the building
- Fermilab Security will install the electronic automated card access systems. Provisions shall be made to provide raceway, minimum ½-inch EMT conduit, where required and at all exterior doors with associated junction boxes and fittings.
- During design, coordinate with Fermilab Security Department for camera placement & technical specifications.
- During design, coordinate with Fermilab Security Department regarding door hardware and locking systems.
- Areas of Refuge shall be provided with two-way communication in accordance with IFC.

C. Installation, Fabrication, and Construction

Install, fabricate or construct the facilities in accordance with manufacturer's recommendations/instructions and standard "trade" industry practices.

DRAFT

IV. Fire Alarm

The Fermilab site uses a custom Facility Information Reporting Utility System (FIRUS) that is on a secure network and monitors the status of fire, security, and utility sensors throughout the laboratory. FIRUS signals Fermilab's Communication Center (Comm Center) which is staffed with operators 24/7. The Comm Center dispatches the appropriate emergency response personal. Leased space will use other means and methods on remote monitoring of alarm systems and will be determined by the project design team.

The fire alarm system, in many cases, is directly connected to other equipment, e.g., HVAC shut-down, dampers, smoke abatement, elevator recall & power shut-down, security access doors, door holders, and Oxygen Deficiency Hazard Controls. The fire alarm contacts may or may not be configured in a "fail safe" operation. In addition, the contacts may be normally open (NO) or normally closed (NC) depending on the equipment operation. Every effort shall be made to separate low voltage (less than 50 volts) from the high voltage (greater than 50 volts) by using an interface relay.

A. Design/Construction Submittals

Working plans, battery, and voltage drop calculations should be in accordance with NFPA 72.

B. Design Criteria and Evaluation

- All new fire alarm systems should be intelligent addressable type, unless directed otherwise by the project design team.
- All new fire alarm systems should be reviewed and considered for emergency voice alarm system capable of integrating with Fermilab Site-wide Emergency Warning System. This determination will be made by the project team, Fire Hazard Safety Subcommittee and the project design team.
- All fire alarm control panels (FACP) should be provided with a T-45 key and lock assembly.
- FACPs shall be provided with by-pass switches or function keys for custom control of notification devices and sub-functions (may exclude FIRUS) for testing and maintenance purposes (including Fire Department Test Mode) as determined by the Fire Systems Maintenance Group.
- When designing an addressable system, in duct smoke detectors should provide a supervisory signal at the fire alarm control panel and signal output should be supervisory to FIRUS.
- All fire alarm systems shall be connected to Fermilab's FIRUS systems, capable of indicating FIRE ALARM, SUPERVISORY, and TROUBLE signals.
- All FACPs shall be provided with a walk-test feature.
- All FACPs shall be provided with smoke verification feature.
- The fire alarm control panel or supplement power panels shall be provided with a designated 120V circuit with switch and handle guard, see figure no. 3 below.

DRAFT

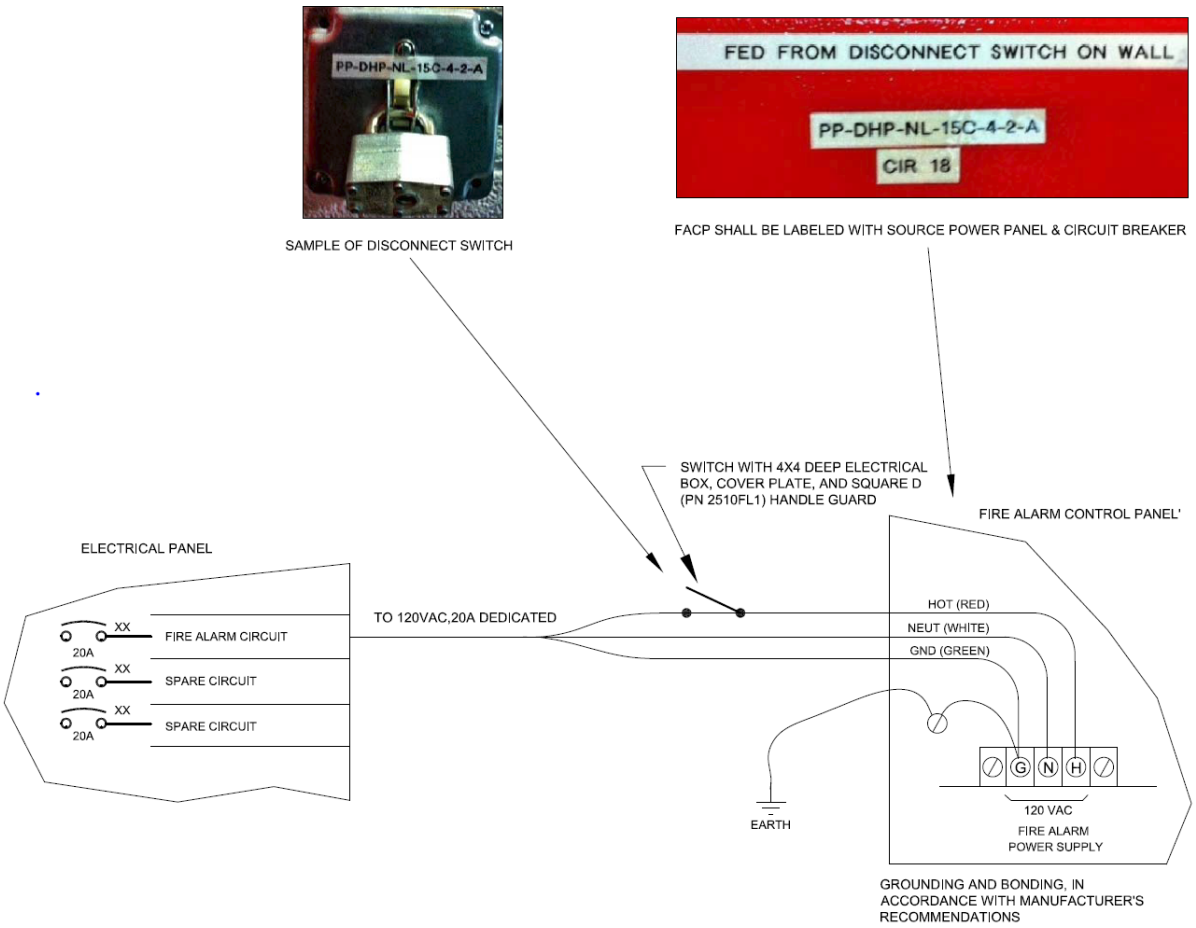

Figure 3 - Fire Alarm Power Configuration

- All programming and addressable device descriptions shall be reviewed by the Fire Department and Fire Systems Maintenance Group prior to download of program into FACP. In addition, a hard copy of software programming, electronic programming files, and electronic as-built documents shall be provided to FESS.
- FACP should be capable of self-restoring in power outage troubles and selectable for latching all other trouble or supervisory signals.
- Upon completion, the fire alarm manufacturer should provide on-site factory training for the fire system maintenance group.
- Products, Materials, and Equipment
- Acceptable equipment manufacturers for addressable fire alarm control panels are Siemens, unless approved otherwise by FHS and project design team.
- Acceptable equipment manufacturers for conventional (non-addressable) fire alarm control panels are Siemens or Honeywell Silent Knight, unless approved otherwise by FHS and project design team.
- Line type heat detection, manufactured by Protectowire®, should be installed in beam enclosures.
- Air sampling smoke detection manufactured by Xtralis™ (VESDA).
- .

C. Installation, Fabrication, and Construction

- Addressable circuits should be a minimum of 18 AWG solid twisted jacketed cable and must meet manufacturer's requirements. Conventional (Hardwire) initiating circuits should be a minimum of 18 AWG solid cables. Notification appliance circuits should be a minimum of 14 AWG solid cables. Combination horn and strobe devices can be two-wire; however, combination speaker and strobe devices shall be 4-wire with audible circuit (e.g., red) a different color then the visual circuit (e.g., blue).
- All cabling should be installed in conduit, minimum 3/4-inch EMT. Provide IMC as required by NFPA 70 (NEC).
- All manual pull stations should be dual action type and able to be reset with a T-45 key or an Allen wrench.
- Air sampling smoke detection test station and special configurations:
  - A test connection with cap and test hole shall be located approximately 6-feet above finished floor.
  - For hazardous spaces such as Cleanrooms and Radiation Spaces, the air sampling smoke detector should be located outside the hazard and air return should be piped back into the hazard space.
  - In hazards spaces as described above, provide test valve in addition to the test port located approximately 6-feet above finished floor.
- All fire alarm system shall be connected to Fermilab's FIRUS system, capable of indicating FIRE, SUPERVISORY, and TROUBLE signals via independent Form C relays.
- All fire alarm cabling should be located in raceways. Reference the electrical design guides for type of conduct/raceways.
- All junction boxes with blank covers must be identified as "Fire Alarm", "FA", or painted red.
- All sources of AC power greater than 24 volts supplying power to the FACP or other fire alarm control units, power supply must have cabinets labeled with the identification of the power distribution panel and circuit breaker.
- All sources of AC power greater than 24 volts supplying power to the FACP or other fire alarm control units, power supply must have a barrier installed to protect a worker from an electrical shock hazard.
- At no time is it allowable to install control wiring with voltages greater than 24 volts (except for the dedicated circuit for the panel or power supply) inside of any control panel.
- Any control circuit using voltages greater than 50 volts must use a junction box (other than the FACP or fire alarm control unit) and interface relay (reference Background Section). The relay contacts must have a barrier installed to protect a worker from an electrical shock hazard. The junction box must also be clearly identifying the voltage and source information of the power distribution panel and circuit breaker.
- At a minimum, all work must comply with NFPA 70 and 72.
- Install according to manufacturer's recommendations/instructions and standard "trade" industry practices.
- If lighting controls are provided, the fire alarm should be integrated to turn on lights during an alarm activation

DRAFT

V. Automatic Sprinkler Systems

Main site fire protection supply water is from Fermilab's Industrial Cooling Water (ICW). The ICW system is non-potable and comes from an open pond reservoir and therefore; is considered a "raw water source" as designated by NFPA 13. The Fermilab's Village area fire protection supply water is from Village of Warrenville and is a potable water source. Leased space fire protection water supply will be different and will be determined by on the project design team.

A. Design/Construction Submittals

Working plans and hydraulic calculations shall be in accordance with NFPA 13

B. Design Criteria and Evaluation

- The minimum design density shall be based on Ordinary Hazard Group I.
- Hydraulically designed sprinkler systems shall be designed for not less than 10-psi below the ICW water supply curve, see Appendix B. The Village area will be at the discretion of the design team.
- The minimum sprinkler spacing shall be 130 square feet and 100 square feet for experimental, assembly, collision hall and general industrial high bay areas.
- Preference in utilizing standard spray, quick response sprinklers should be utilized.
- In general, high bay areas, such as assembly, experimental halls, etc., the minimum sprinkler K factor of 8.0 should be utilized at a design density of Ordinary Hazard Group II, reference NFPA 13.
- Return bends (arm-overs) shall be provided on all pendent sprinklers.
- All wet type automatic sprinkler system pipes shall be schedule 40 steel. Dry type automatic sprinkler system pipes shall be either schedule 40 steel or galvanized schedule 40 pipe, determination by the design team.
- 1/2" or 3/4" Pipe should be galvanized steel, schedule 40 when retrofitting existing upright sprinkler outlets supplying new pendent type sprinklers.
- Water-flow alarm detectors (switches) should be provided with double pole, double throw contacts, rated at 120 VAC at 3 amps.
- Preaction sprinkler systems should be configured as double interlocked. In addition, the air supervisory switch should be cross zoned with the releasing detection.
- Collision Hall sprinkler system should be dual action preaction type.
- Clean rooms should be designed with quick response sprinklers with an operational design of 0.2 gpm over 3,000 sq. ft., NFPA 318.
- Water-flow supply test information can be obtained from the FESS-Engineering Department.
- All control valves should be provided with electronic valve supervisory (tamper) switches.
- Flushing valve arrangement should be provided through the fire department connection, see Figure 5 below.

DRAFT

- Provide isolation valve with supervisory switch for branch line supplying sprinklers in Elevator shaft.
- As-built documents shall be provided to Fermilab in accordance with the project's technical specifications.

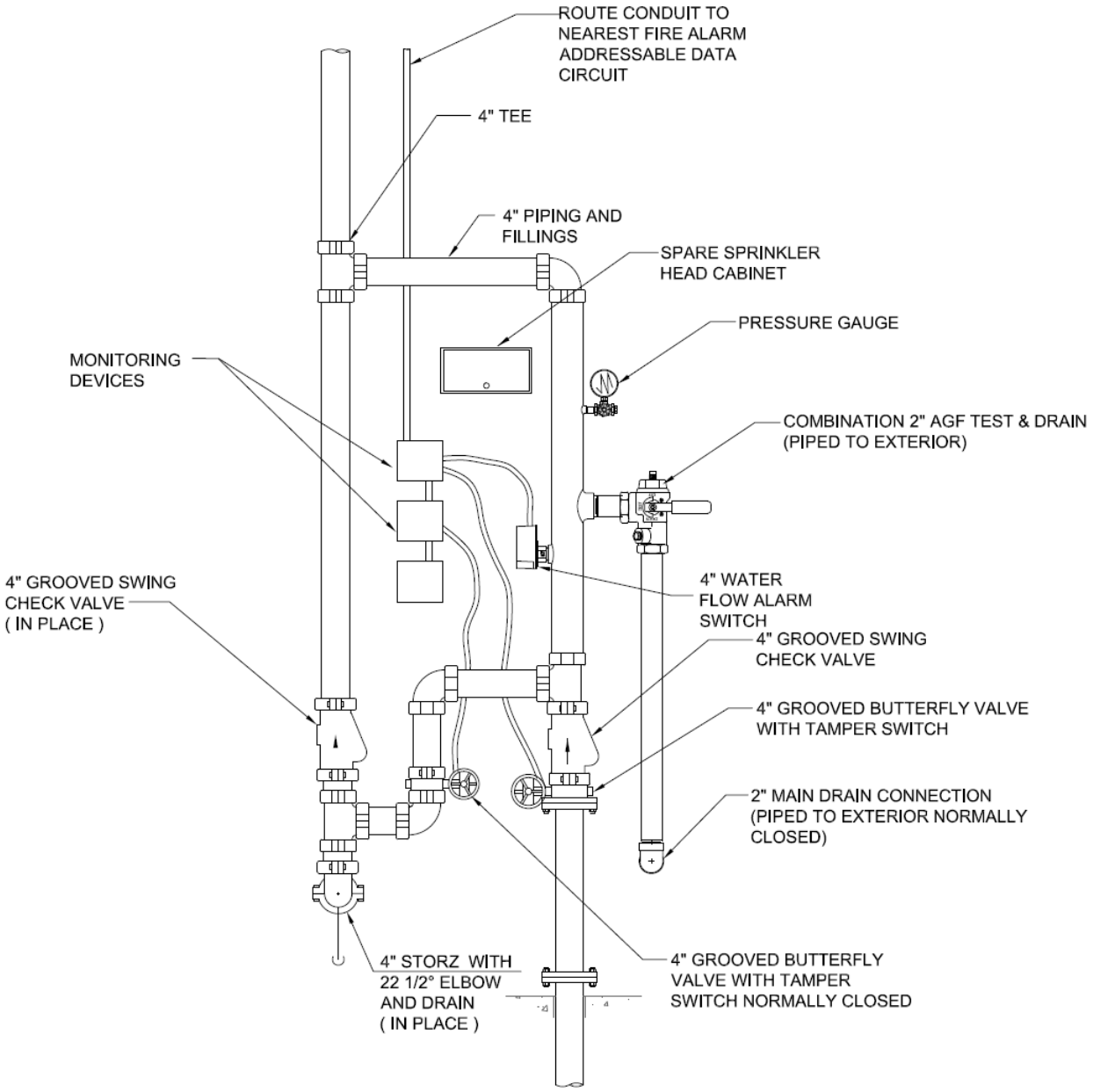

Figure 4 - Typical Wet Type Sprinkler Riser

C. Products, Materials, and Equipment

- All devices and equipment shall be U.L. Listed and/or FM Approved.
- Spray sprinklers, valves, check valves, including deluge and preaction valve assemblies, should be manufactured by Viking® or Tyco.

- Backflow preventers as required by the design team should be manufactured by Watts - FEBCO®, series 880V.
- Fire Department connection should be a 4-inch "Locking Storz" quick connect with a 22¼-degree straight-galvanized or anodized aluminum elbow on the exterior inlet pipe to the Storz connection. Also, the gasket shall be removed from the Storz cap.
- Fire Department Hose Valve should be Giacomini or Potter Roemer, angled pressure (adjustable flow) reducing valve, female NPT to male hose thread, 2-1/2-inch, and installed at a 45-degree angle.
- Combination auxiliary and inspector's test connections should be provided on sprinkler risers, manufactured by AGF Test and Drain Assembly.

D. Installation, Fabrication, and Construction

- A control valve should be provided after the preaction valve assembly, to facilitate testing without introducing water throughout the piping network.
- If feasible, air compressors should be mounted above the point of connection with flexible tubing, such as rubber hose.
- Consider installing ¾-inch relief valves on small, service building, type sprinkler systems to alleviate the potential of solar heating on static pressures in wet-type sprinkler systems.

DRAFT

VI. Special – Fixed Fire Extinguishing Systems

Fermilab uses special fixed fire extinguishing systems to protect experiments, programmatic functions, etc. This includes water mist fire suppression systems, gaseous fire extinguishing systems, and deluge water spray systems.

A. Design/Construction Submittals

Working plans, calculations, battery, and voltage drop calculations should be in accordance with NFPA applicable standards.

B. Design Criteria and Evaluation

- CO_2 fire suppression system should be avoided.
- If air sampling is the method of detection, then the air sampling display should be programmed so that 100% at 40 seconds sends a signal via FIRUS indicating that FIRST LEVEL OF AIR SAMPLING IN ALARM. Release of agent should be at 100% for 60 seconds.
- If cross-zone detection is provided, then additional signal outputs from the releasing control panel to FIRUS should indicate FIRST DETECTOR ZONE IN ALARM and SECOND DETECTOR ZONE IN ALARM.
- The manifold pressure switch should connect directly into FIRUS and indicate AGENT RELEASED.
- Provide a time delay after second alarm prior to releasing agent to facilitate HVAC shut-down.
- Equipment shut-down, such as dampers and electronics should be from a manifold pressure switch.
- Manifold pressure switches should be provided with a minimum of double pole and double throw contacts.
- HVAC shut-down should occur at second alarm of cross-zone.

C. Products, Materials, and Equipment

- All devices and equipment must be listed or approved by a recognized testing laboratory
- UTC Fire & Security - Water Mist Marioff
- UTC Fire & Security – Kidde - Fenwal

D. Installation, Fabrication, and Construction

Install according to manufacturer's recommendations/instructions and standard "trade" industry practices.

DRAFT

VII. Fire Extinguisher

Every new design shall incorporate the size and location of fire extinguishers. Placement of fire extinguishers shall be reviewed by the fire department prior to installation. When the project consists of beam enclosures, reference FESHM Chapter 6020.1. .

A. Design/Construction Documents

Provide industry standard documents.

B. Design Criteria and Evaluation

- Fermilab's Fire Department will provide guidance on placement and type of fire extinguisher in new facilities.
- Forged, non-slip discharge hose ethylene propylene diamine (EPDM) rubber, aluminum handle positions
- Tank shall be stainless steel for H_2O and formulated type for specialized extinguishing agents, such as the clean agent fire extinguishers for data centers, as specified by the fire extinguisher manufacturer.
- Tank shall be welded steel tube for dry chemical applications
- If caps are provided with indicators, then stems should be the pop up type.
- Forged aluminum fill caps
- Suggested areas:
  - General Areas (Office, Corridors, Mechanical Spaces)
    - Dry chemical, made of Monoammonium phosphate, Class ABC type fire extinguisher, 10 lb. Capacity
  - Computer Rooms
    - Clean Agent, Class C type extinguisher, 9.5 lb. (DuPont FE-36)
  - Kitchen Areas
    - Wet agent, Class K type fire extinguisher, 1.6-gallon capacity
  - Flammable Liquids and Gas Areas
    - Dry chemical, Class B type fire capacity

C. Products, Materials, and Equipment

- Fire extinguishers must be U.L. Listed and/or FM Approved, approved manufactures are:
  - Ansul
  - Amerex®

D. Installation, Fabrication, and Construction

- For semi-recessed or surface mounted cabinets, reference architectural design guides.
- Install according to manufacturer's recommendations/instructions and standard "trade" industry practices.

DRAFT

Attachment A

Fermilab

Engineering
Facilities Engineering Services Section
630.840.3856 (phone)
630.840.4980 (fax)

Memorandum

July 5, 2011

To: Mike Utes, Chair of Electrical Safety Subcommittee
James Priest, Chair of Fire Hazard Subcommittee, and site AHJ

From: Jim Niehoff, FESS-Engineering

Subject: **Emergency Power Off System Requirements**
FESS Engineering Project No. 10-5-75

This memorandum will serve as a formal request to the Electrical Safety Subcommittee to provide concurrence on FESS-Engineering's approach to Information Technology Equipment rooms and to recommend that the subcommittee to evaluate and provide recommendations on the use of emergency power off systems.

Reference Codes/Standards

- DOE Order 420.1B, Facility Safety, 2005
- IBC, International Building Code, 2009
- NFPA 70, National Electrical Code, 2011
- NFPA 72, National Fire Alarm and Signaling Code, 2010
- NFPA 75, Standard for Fire Protection of Information Technology Equipment, 2009
- NFPA 76, Standard for Fire Protection of Telecommunications Facilities, 2009

Background

The history of the emergency power off switch dates back to 1959, when a fire in the Air Force's Statistical Agency's computer room located in the Pentagon, burned for more than 4-hours without being detected[1]. It scorched 4,000 square feet and caused more than $30 million in property damage. The fire was fueled by magnetic tape and there were no automatic sprinklers, fire/smoke detection, or gaseous agent fire extinguishing systems present. As a result, the US Congress went to the National Fire Protection Association (NFPA) and requested new rules to be developed for protecting computer rooms[2]. To that end, in 1962 NFPA published NFPA 70 Section 7301 stating:

> *..Controls for disconnecting means provided as a part of the main service wiring supplying the electronic computer equipment shall be located near the operator's console and next to the main exit door to readily disconnect power to all electronic equipment in the electronic computer area and to the air conditioning system.*

This evolved into a disconnecting means for information technology equipment or as the industry commonly refers to, an emergency power off (EPO) system. Since its introduction into the national electrical code, an environment has developed by the fire service professionals and first responders considering EPO systems as a life-saving measure, a kill switch at the door. A supplement meeting was held with Fermilab's Fire Department on June 8, 2011, confirming their preference of EPO systems in Information Technology Equipment Rooms.

Over the past year and half, Fermilab has experienced three incidents involving power disruption to computer rooms. As result of these power disruptions it was apparent that the Emergency Power Off (EPO) systems were not integrated properly into the power systems serving the computer rooms. For discussion purposes, the contents of computer rooms are defined as:

- Data Center
- Robotic Tape Storage

Contents of Telecommunication rooms are:

- Network
- Broadband
- Telephone Switching

Code Analysis

There is no building code referencing standards NFPA 75 or NFPA 76. However, DOE Order 420.1B requires all applicable NFPA codes/standards be met. In addition, FESHM 6015 requires an insurance approach to protecting Fermilab's facilities, commonly known as Highly Protective Risk (HPR). This approach would also include these standards. Finally, the National Electrical Code (NFPA 70) Article 645.10 references emergency shutoff in rooms containing Information Technology Equipment as defined by NFPA 75. To that end, FESS-Engineering has designed and constructed computer rooms and telecommunication rooms (network rooms) under the guidance of NFPA 75 and NFPA 76. NFPA 75, Chapter 10 related to building utilities states:

> ***10.4.8 Disconnecting Means.*** *An approved means shall be provided to disconnect power to all electronic equipment in the information technology equipment room or in designated zones within the room. There shall also be a similar approved means to disconnect the power to all dedicated HVAC systems serving the room or designated zones and shall cause all required fire/smoke dampers to close. The control for these disconnecting means shall be grouped and identified and shall be readily accessible at the principal exit doors. A single means to control both the electronic equipment and HVAC systems in the room or in a zone shall be permitted. Where a pushbutton is used as a means to disconnect power, pushing the button in shall disconnect the power. Where multiple zones are created, each zone shall have an approved means to confine fire or products of combustion to within the zone.*

The current work smart set, FESHM 1070 references NFPA 70, 2005 Edition and Article 645.10 of that edition states:

> ***645.10 Disconnecting Means.*** *A means shall be provided to disconnect power to all electronic equipment in the information technology equipment room. There shall also be a similar means to disconnect the power to all dedicated HVAC systems serving the room and cause all required fire/smoke dampers to close. The control for these disconnecting means shall be grouped and identified and shall be readily accessible at the principal exit doors. A single means to control both the electronic equipment and HVAC systems shall be permitted. Where a pushbutton is used as a means to disconnect power, pushing the button in shall disconnect the power.*

NFPA 70 and NFPA 75 have similar requirements for Information Technology Equipment, i.e., Computer Rooms. The data center industry has been very concerned with EPO systems and the following is an excerpt from a web article discussion with Richard Sawyer, Strategist, HP Critical Facilities Services, published in 2007[5]:

> *"There isn't much good about EPO today," said Sawyer, citing the many instances in which the buttons have figured in outages. "The EPO represents a single point of failure. We are getting more dependent as a culture on data centers. People can get killed and lives ruined by data center failures today."*
>
> *Sawyer shared data compiled by UPS vendors help quantify the extent of data center failures connected with the emergency power off button. One vendor reported 20 EPO related incidents between January 2002 and June 2003, representing 13% of all UPS failures during that time. Another UPS vendor's study found that 26% of all human error failures were caused by the EPO, often in scenarios involving vendors, delivery persons or cleaning crews.*

Computer Rooms and Code Requirements

In July 2010, the data center industry was successful in changing the National Electrical Code to allow the omission of an emergency power off system. The new NFPA 70 (NEC) 2011 Edition revised Article 645.10 is as follows.

> ***645.10 Disconnecting Means.*** *An approved means shall be provided to disconnect power to all electronic equipment in the information technology equipment room or in designated zones within the room. There shall also be a similar approved means to disconnect the power to all dedicated HVAC systems serving the room or designated zones and shall cause all required fire/smoke dampers to close. The disconnecting means shall be implemented by either (A) or (B).Exception: Installations qualifying under the provisions of Article 685.*
>
> ***A Remote Disconnect Controls.*** *(1) Remote disconnect controls shall be located at approved locations readily accessible in case of fire to authorized personnel and emergency responders. (2) The remote disconnect controls for the control of electronic equipment power and HVAC systems*

shall be grouped and identified. A single means to control both systems shall be permitted. (3) Where multiple zones are created, each zone shall have an approved means to confine fire or products of combustion to within the zone. (4) Additional means to prevent unintentional operation of remote disconnect controls shall be permitted.

Informational Note: *For further information, see NFPA 75-2009, Standard for the Protection of Information Technology Equipment.*

B Critical Operations Data Systems. *Remote disconnecting controls shall not be required for critical operations data systems when all of the following conditions are met:*
(1) An approved procedure has been established and maintained for removing power and air movement within the room or zone.
(2) Qualified personnel are continuously available to meet emergency responders and to advise them of disconnecting methods.
(3) A smoke-sensing fire detection system is in place.
(4) An approved fire suppression system suitable for the application is in place.
(5) Cables installed under a raised floor, other than branch-circuit wiring and power cords installed in compliance with 645.5(D)(2) or (D)(3), or in compliance with 300.22(C), 725.154(A), 770.113(C) and Table 770.154(a), 800.113(C) and Table 800.154(a), or 820.113(C) and Table 820.154(a).

Informational Note: *For further information, see NFPA 72-2010, National Fire Alarm and Signaling Code.*

645.11 Uninterruptible Power Supplies (UPSs).*Except for installations and constructions covered in 645.11(1) or (2), UPS systems installed within the information technology equipment room, and their supply and output circuits, shall comply with 645.10. The disconnecting means shall also disconnect the battery from its load.*
(1) Installations qualifying under the provisions of Article 685
(2) Power sources limited to 750 volt-amperes or less derived either from UPS equipment or from battery circuits integral to electronic equipment

The upcoming release of NFPA 75, 2012 Edition, Section 10.4.8 has adopted the same language found in the current NEC Article 645.10.

Unique Situations

Fermilab occasionally constructs network rooms and data centers with dual power sources. Many computer equipment manufacturers provide dual redundant power inputs. A simplified diagram is provided below.

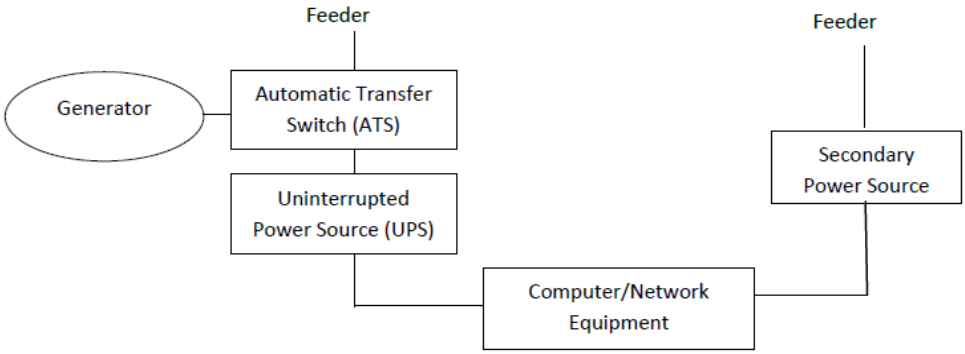

This presents a challenge for installation of a proper EPO system. In older data centers at Fermilab containing EPO systems, design standards in place at the time of these legacy data centers, integrated the gaseous agent fire extinguisher systems to include disablement of the HVAC units, but not necessarily de-energizing the power to the HVAC unit. The EPO systems would also de-energized the primary power source and not necessarily the secondary power source. The following table describes the data center/computer rooms here at the lab (Table 1).

Table No. 1

FIMS No.	Location	Automatic Sprinkler System	Smoke Detection	Gaseous Agent Fire Extinguisher system	EPO System
003	FCC - Tape Vault Mezz	Yes	Yes	Yes(1)	No
003	FCC – 2nd Floor	Yes	Yes	Yes(2)(3)	Yes
003	FCC – 3rd Floor	Yes	Yes	No	Yes
212	Cross Gallery - Main Level Mac Room	Yes	Yes	Yes	Unknown
212	Cross Gallery -Lower Level Mac Room	Yes	Yes	Yes	Unknown
212	Cross Gallery - Lower Level FIRUS Room	Yes	Yes	No	Unknown
628	GCC – Computer A	Yes	Yes	No(3)	Yes
628	GCC – Computer B	Yes	Yes	No	Yes
628	GCC – Computer C	Yes	Yes	No	Yes
628	GCC – Computer D	Yes	Yes	No	Yes
700	LCC Computer Rm 107	Yes	Yes	No	Yes
700	LCC Computer Rm 108	Yes	Yes	No	Yes
806	ICB Main Level	Yes	Yes	Yes(4)	No

(1) Inergen gaseous fire extinguisher system in robotic tape silos
(2) Under floor halon gaseous fire extinguisher system
(3) FM-200 gaseous fire extinguisher system in robotic tape silos
(4) FM-200 gaseous fire extinguisher system throughout the computer space

Telecommunication Rooms and Code Requirements

NFPA 76, Standard for the Fire Protection of Telecommunications Facilities, 2009 Edition, Section 3.3.9 defines Telecommunications as the transmission, receiving, switching, and management of signals, such as electrical, optical, or electromagnetic, by wire, fiber, or through the air. Section 3.3.10 defines telecommunications facility as a building or portion of a building that includes telecommunications equipment area and support area. In addition, Section 3.2.12 includes voice communication using internet protocols (VoIP).

Fermilab has numerous small rooms that contain data switching such as the south ends of Wilson Hall, Lab BEG Network Room, Site 39 Network Room, etc. NFPA 76 excludes rooms (closets) less than 500 square feet, therefore the individual network closets are exempt from this document. However, the network rooms at FCC (HACC), WH 8W Fiber Hub, and GCC Network Room A and B are greater than 500 sq. ft., but less than 2,500 sq. ft; thereby, negating the requirement for a smoke management system. Typically, telecommunications require compartmentation and early warning type smoke detection, such as air sampling.

The National Fire Protection Handbook states[5]:

> *On first examination, modern digital telecommunications equipment resembles modern computers or data processing equipment. Although there are similarities, a number of important differences exist. One of the most significant differences is the type of information processing performed. Telecommunications systems do not store or process customer data; it merely transfers data from point A to point B. In a disruption, all information in transit is lost, and the ability to transmit information ceases. In contrast, data processing systems generally process information stored in the system's memory subsystems. In a disruption, current memory may be lost, along with any calculation results that have not been placed in permanent memory. However, all stored information remains in the storage media... Emergency power off (EPO) switches may be appropriate for certain configurations of electronic data processing systems, such readily available means to kill power to telecommunications equipment would cause abrupt end to 9-1-1 and other critical community-oriented emergency services. Therefore, the telecommunications industry avoids the use of EPO switches.*

Historically, telecommunications equipment was DC and the conversion from AC to DC took place outside the equipment, which was viewed as less hazardous. However, with the advent of broadband, NFPA 76 was revised to include signal processing equipment which consists of switch/transport access equipment, servers, routers, and computers; thereby, allowing AC power.

To that end, NFPA 76 Section 6.5.1 requires a means to disconnect power from building services equipment, power and lighting circuits, and telecommunications equipment shall be identified for incident intervention. In addition, Section 6.5.2 states that power distribution/disconnect equipment with appropriate marking shall be permitted to be used as a means to disconnect power. The Appendix clarifies this requirement by stating to provide a procedure and any necessary marking of disconnect equipment to remove all sources of power from specific equipment or building area that could be

electrically overloaded or involved in a fire incident. The Appendix further states that the intent is not to provide an emergency power off capability as required by NEC Article 645.10. Table 2 indicates the network rooms, it excludes telecommunications/network rooms (closets) less than 500 square feet.

Table No. 2

FIMS No.	Location	Automatic Sprinkler System	Smoke Detection	Gaseous Agent Fire Extinguisher system	EPO System
001	WH 8W Fiber Optic Hub	Yes	Yes	No	Yes
003	FCC – 2nd (West) (1)	Yes	Yes	Yes	
003	FCC – 3rd Floor Network Rm	Yes	Yes	No	No
628	GCC – Network Rm A	Yes	Yes	No	No
628	GCC – Network Rm B	Yes	Yes	No	No

(1) Network racks are located in the FCC computer room and have redundant power sources

For the purposes of this request, Control Rooms Cross Gallery Main Control Room, AP-50, IB-1, CDF, D-Zero, EOAC network area, WH Comm Center, WH LHC, and WH-12 MINOS are not defined as computer rooms or network rooms, since they are normally occupied and are considered critical operations. In addition, this request excludes existing abandon control rooms such as Lab E.

Recommendations:

It is requested that the Electrical Safety Subcommittee review the existing computer/telecommunication (network) rooms and provide guidance to future construction related to:

1. New data centers/computer rooms will be designed in accordance with NFPA 70, 2011 Article 645.10(A) and/or 645.10(B). The Fire Safety's Authority Having Jurisdiction (AHJ) would have to be consulted in order for a data center/computer to be classified as critical as delineated in NFPA 70, 2011 Article 645.10(B). Verify that there is a primary means to disconnect the Critical Operation room's power and clearly labeled and documented.
2. In the past, EPO systems were not installed in network rooms. New telecommunication (network) rooms over 500 square feet will be provided with an EPO system, unless the Fire Safety AHJ concurs that the room is classified as critical and therefore, EPO system will not be installed. In such cases, appropriate signage and documentation will be provided indicating the sources of power.
3. Concurrence on the existing Fermilab's network rooms defined as telecommunications rooms less than 500 square feet, as presented in this paper, and the omission of EPO systems in such rooms.
4. All new EPO systems will be of a commercial control equipment type, such as Fike's Emergency Power Shutdown Management System, and monitored by the building's fire alarm system or Fermilab's site-wide FIRUS monitoring system.
5. Existing computer rooms and telecommunication (network) areas EPO systems should be evaluated and documented. The goal should be to comply with NFPA 70, 2011 Edition. A report with recommendations should be prepared for the computer rooms and network areas by an outside consultant under the review and concurrence by the Electrical Safety Subcommittee. In addition, this report should identify the non-compliance rooms and forward the information to the Fire Department in order to allow for adequate precautions for response in the event of an incident.

cc: A. Walters, CD
R. Ortgiesen, FESS
K. Collins, FESS
M. Bonkalski, FESS
S. Dixon, FESS/E
R. Wielgos, FESS/E
J. Steinhoff, FD
C. Kuhn, FD

References

1. Pentagon Fire -1959, published February 11, 2005 at: http://www.arlingtonfirejournal.blogspot.com
2. Data Center EPO Vulnerability Fixed in 2011 National Electrical Code, Published November 5, 2010 by Matt Stansberry. http://searchdatacenter.techtarget.com
3. Averting Disaster with the EPO Button, Published May 7, 2007 at: http:://www. datacenterknowledge.com
4. Department of Energy Handbook Electrical Safety, 2004 Edition
5. 20th Edition of Fire Protection Handbook, 2008

Attached: White Paper, Communications Cable & Connectivity Assoc., November 4, 2010

Attachment B - Water Supply

The purpose of this analysis is to provide the design water flow supply curves for designing water-based fire suppressions systems. This data was derived from the Industrial Cooling Water Vulnerability Analysis originally conducted in 2006 by Crawford, Murphy, & Tilly, Inc. (CMT) and later updated in 2014. This analysis was conducted using WaterCAD hydraulic model software and actual water flow test performed to calibrate the model. In similar regions of the lab, the data was analyzed to find the minimum flow rate in the regions. This flow rate was used in creation of a pressure and flow graphs, which used the average minimum static pressure and the average minimum residual pressure between generated models of 2006 and 2014 by CMT. Using these values created a conservative estimation. This approximation created individual graphs for nine (9) different regions in the laboratory, see site map on following page. The following water flow design table has been derived.

Site Location	Static Pressure [PSI]	Flow at 20 PSI [GPM]	Flow at 0 PSI [GPM]
Lab A-G Campus Area	75	2015	2382
Muon Experiments Area	76	1488	1755
Site 38 and Site 39 Area	66	1215	1476
IB and CDF Area	74	1425	1689
D0 Area	68	1425	1719
Central Campus Area	75	1215	1436
West Main Ring	74	961	1139
Minos and Science Center	73	961	1142
Main Injector Area	69	1215	1462

This analysis of the design water flows is a conservative approach and the actual water flows may be higher, especially from the peak (summer) cooling demands. Though this analysis does not necessarily omit the requirement for a water flow test in accordance with NFPA 13, caution should be used when assessing the water flow test information due to the variable speed pumps at Casey's pump house to compensate for an open port on a hydrant. In addition, the cooling loads from the ICW system vary during the season, i.e., summer to winter months.

Source Documentation:

CMT August 2014 Report
Fermilab – ICW Modeling Scenarios
FESS Engineering Project Number 3-5-174

CMT November 2006 Report
ICW Vulnerability Analysis Hydraulic Model Update
FESS Engineering Project Number 3-5-143

DRAFT

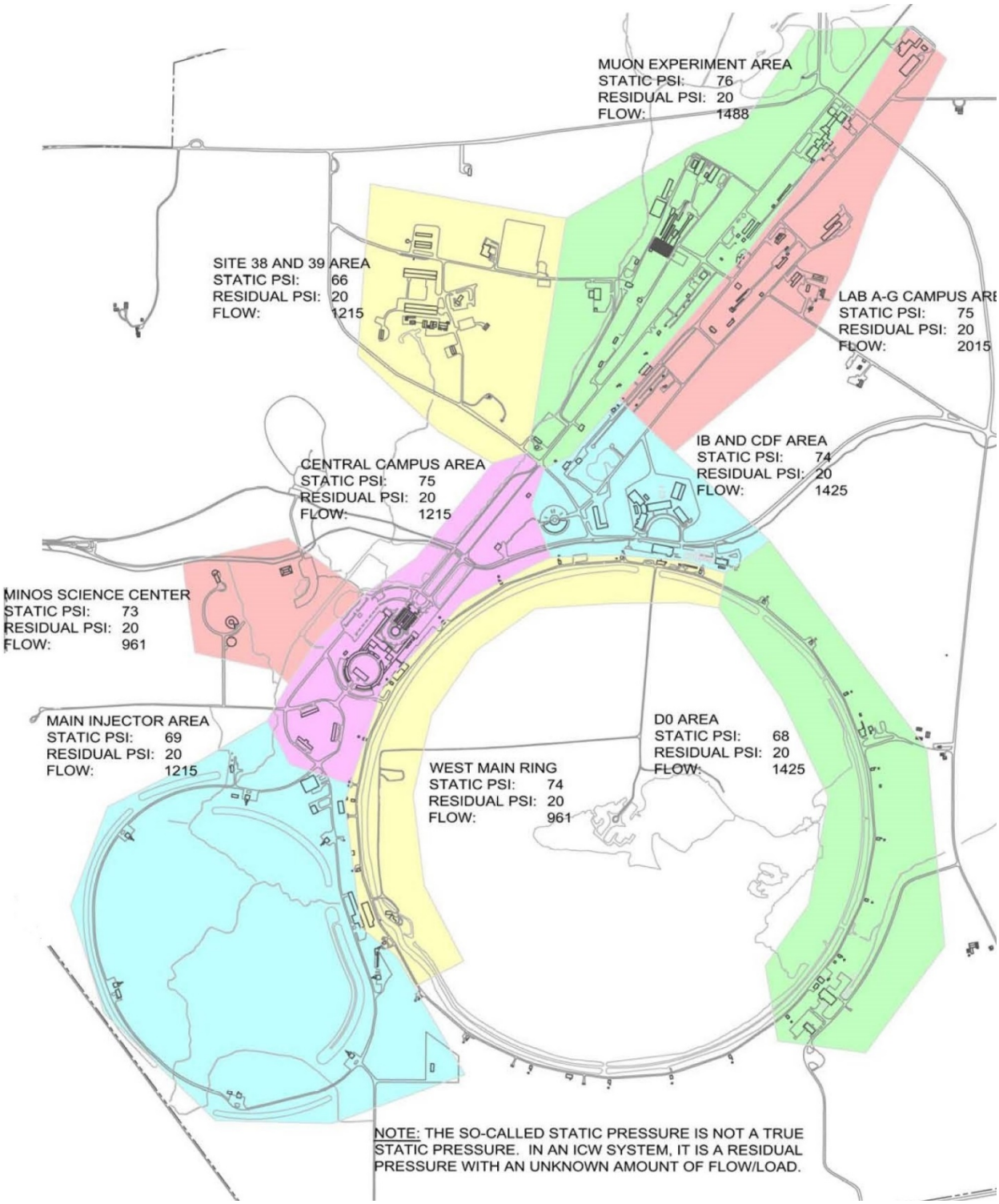

Figure – Site Map